Parts Manual

Mfg. No: 2691814-01

Courier XT, 25 Gross HP B&S Rider w/52" Fabricated Mower Deck

Copyright © Briggs & Stratton. All Rights reserved

1692125 - Cart, Dump (10 Cu. Ft.). . . . . .
1696384YP - Grass Mulcher Kit, 52" Fabricated Mower Deck. . . . . .
1697378A-00 - Kit, ZT Catcher, Twin, CS. . . . . .
1697404-00 - 52" Turbo Collection System. . . . . .
1697427 - Service Jack Kit. . . . . .
1697431 - Service Jack Mating Kit. . . . . .

Not For Reproduction

Copyright © Briggs & Stratton. All Rights reserved

Model Components

	Page
48" & 52" Mower Deck - Roller Group	4
52" Mower Deck - Clutch & Support Group	6
52" Mower Deck - Housing, Arbors & Blade Group	8
Body & Fuel Tank Group	10
Controls Group	12
Decals Group - Brand & Model	14
Decals Group - Safety & Operation	16
Electrical Group	18
Electrical Schematic - Charging Circuit - B&S 44C777 & 44T977	20
Electrical Schematic - Cranking Circuit - B&S 44C777 & 44T977	22
Electrical Schematic - Ignition Grounding Circuit/Op. Pres. - B&S 44C777 & 44T977	24
Electrical Schematic - PTO Clutch Circuit - B&S 44C777 & 44T977	26
Engine Group	28
EVAP Group	30
Frame Group	32
Lift Group	34
Parking Brake Group	36
Seat Group	38
Suspension Group	40
Transmission Group - Suspension	42
Wheel & Tire Group	44
Torque Specification Chart	46

Not For Reproduction

Copyright © Briggs & Stratton. All Rights reserved

48" & 52" Mower Deck - Roller Group

Note: Unless noted otherwise, use the standard torque specifications

Mfg. No: 2691814-01

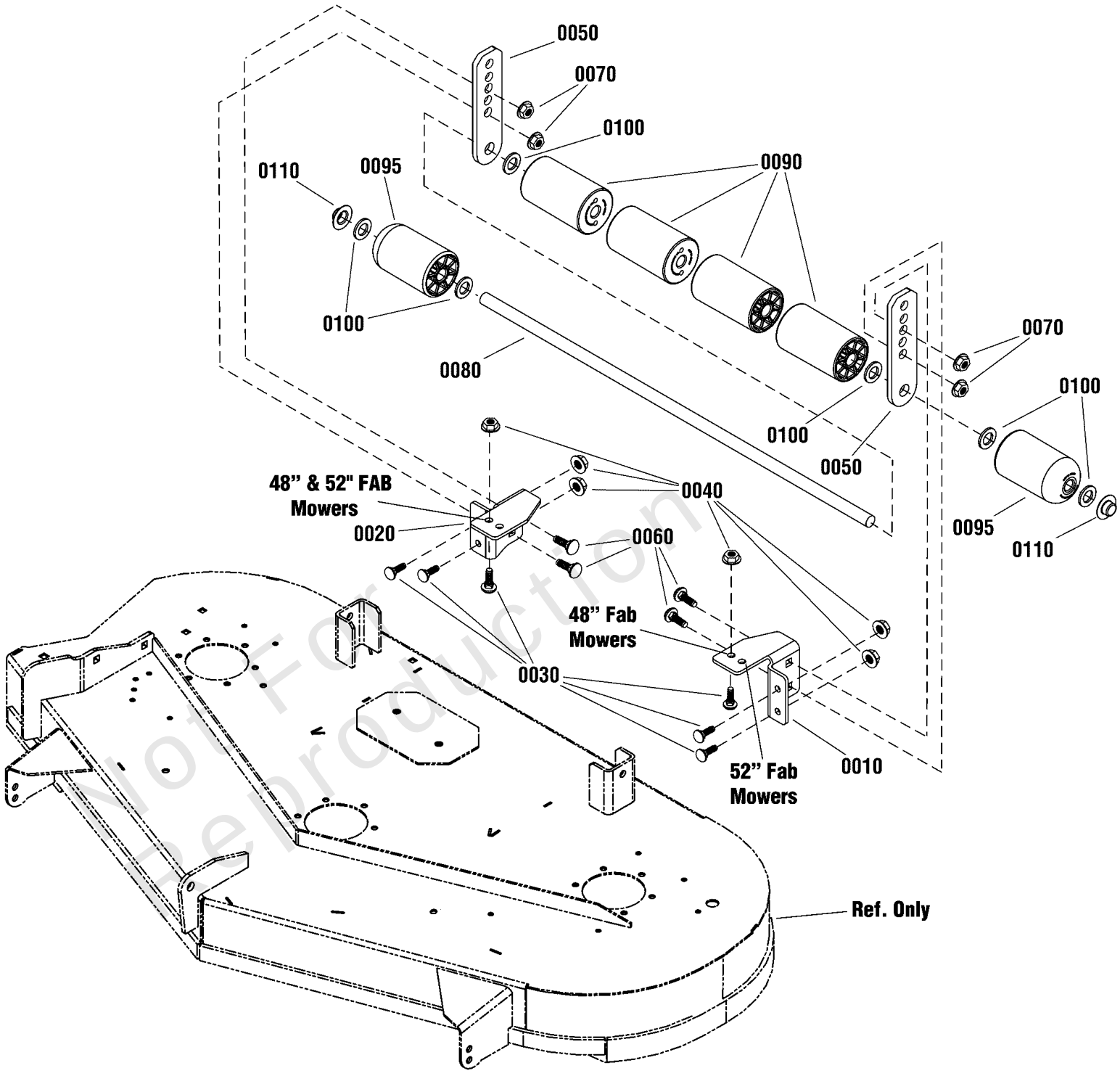

Not For Reproduction

Copyright © Briggs & Stratton. All Rights reserved

48" & 52" Mower Deck - Roller Group

REF NO	PART NO	QTY	DESCRIPTION
0010	1758457AYP	1	MOUNT, Roller Bar, LH
0020	1758458AYP	1	MOUNT, Roller Bar, RH
0030	703185	6	BOLT, Round Head, Short Square Neck
0040	703115	6	NUT
0050	1758461AYP	2	BAR, Roller
0060	703815	4	BOLT, RD SQ 3/8-16X1
0070	5025394SM	4	NUT, 3/8-16 HEX NYLOCK
0080	1758473YP	1	SHAFT, Roller
0090	1668513SM	4	ROLLER, .652 ID, 2.50 OD, 4.10 LG
0095	1722036SM	2	ROLLER, Rounded, 4.1 LG, 650 ID, 2.50 OD Rounded End
0100	703580	6	WASHER, 5/8
0110	771009	2	PUSHNUT, 5/8

Not For Reproduction

Copyright © Briggs & Stratton. All Rights reserved

52" Mower Deck - Clutch & Support Group

Note: Unless noted otherwise, use the standard torque specifications

Mfg. No: 2691814-01

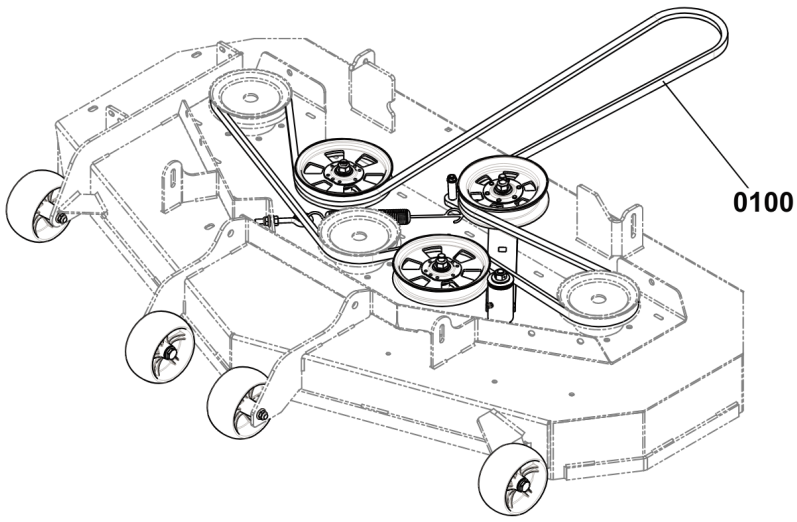

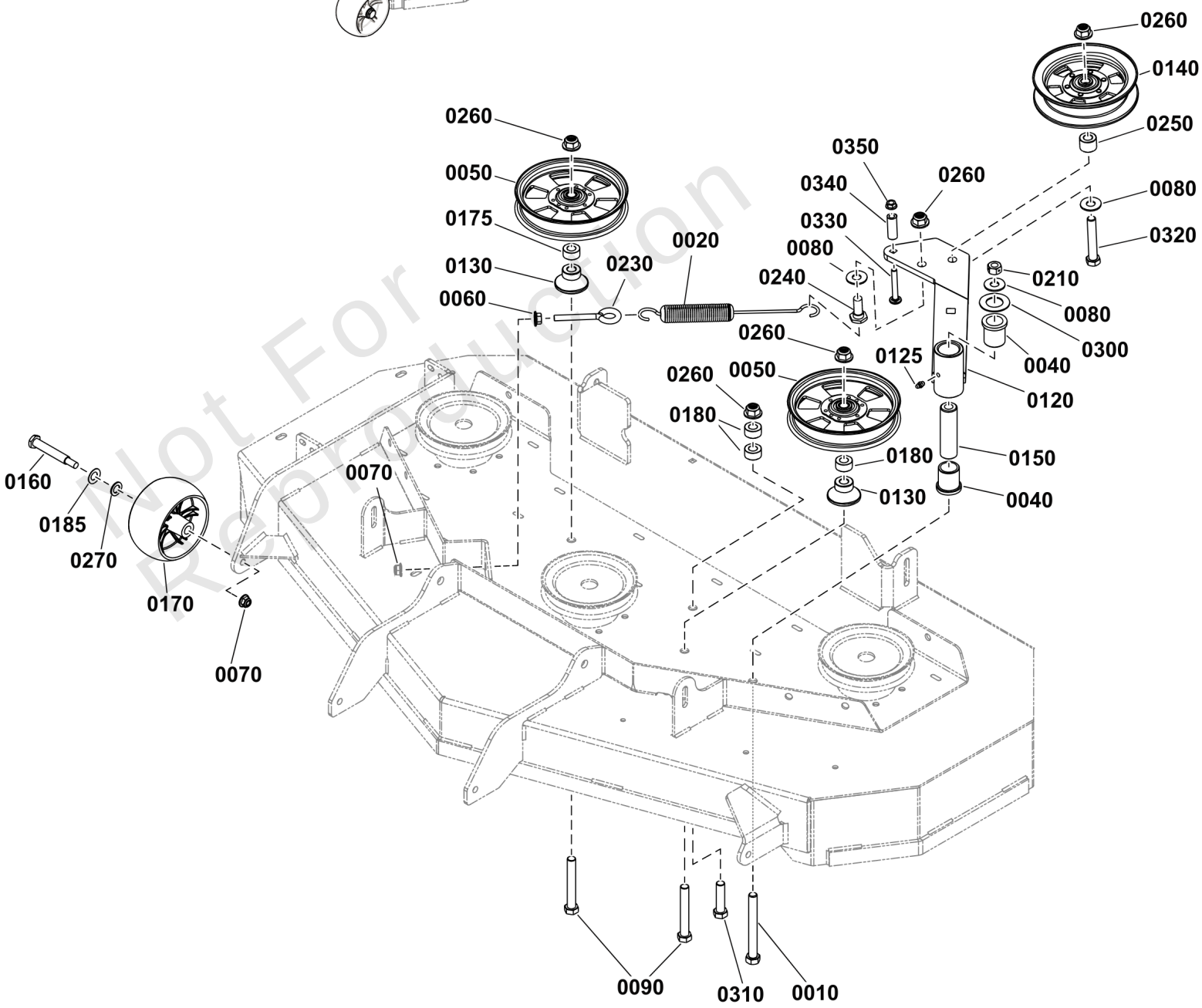

Not For Reproduction

Copyright © Briggs & Stratton. All Rights reserved

52" Mower Deck - Clutch & Support Group

REF NO	PART NO	QTY	DESCRIPTION
0010	5025017X36SM	1	BOLT, 1/2-13 X 4-1/2"
0020	5023340SM	1	SPRING, EXTENSION, SW
0040	5021541SM	2	BUSHING, FLANGE
0050	5104717YP	2	PULLEY
0060	5025128SM	1	NUT, 3/8-16 HEX SERRA
0070	5025394SM	5	NUT, 3/8-16 HEX NYLOCK
0080	703451	3	WASHER, FLAT
0090	5025017X28SM	2	BOLT, 1/2-13 X 3-1/2"
0100	84006540	1	BELT
0120	84007070	1	WELDMENT, Idler Arm, 52"
0125	5020095SM	1	GREASE FITTING, 1/4-2
0130	5103430YP	2	IDLER MNT
0140	5104716YP	1	PULLEY, IDLER
0150	5045022SM	1	SPACER, .52 X 1.00 X
0160	1736539YP	4	BOLT, SHOULDER
0170	1736896YP	4	WHEEL, GAUGE
0175	5101162YP	1	SPACER
0180	84007079	3	SPACER
0185	0020X3MA	4	WASHER,SPRING .52X.99
0210	5025332SM	1	NUT - SIDE LOCK
0230	5025429SM	1	EYEBOLT - 3/8-16
0240	1737409YP	1	BOLT, SHOULDER, .255
0250	5045178SM	1	SPACER, .52 X 1.00 X
0260	5025396SM	5	NUT, Hex Flange, 1/2-13
0270	703128	4	WASHER
0300	703199	1	WASHER, 1
0310	5025017X16YP	1	BOLT, 1/2-13 X 2 GD5
0320	5025017X24SM	1	BOLT, 1/2-13 X 3" GD5
0330	704421	1	SCREW, 5/16 X 2.25
0340	1713588SM	1	SPACER-0.323IDX0.555O
0350	704067	1	NUT, HEX FLNG,5/16-18

Not For reproduction

Copyright © Briggs & Stratton. All Rights reserved

52" Mower Deck - Housing, Arbors & Blade Group

Note: Unless noted otherwise, use the standard torque specifications

Mfg. No: 2691814-01

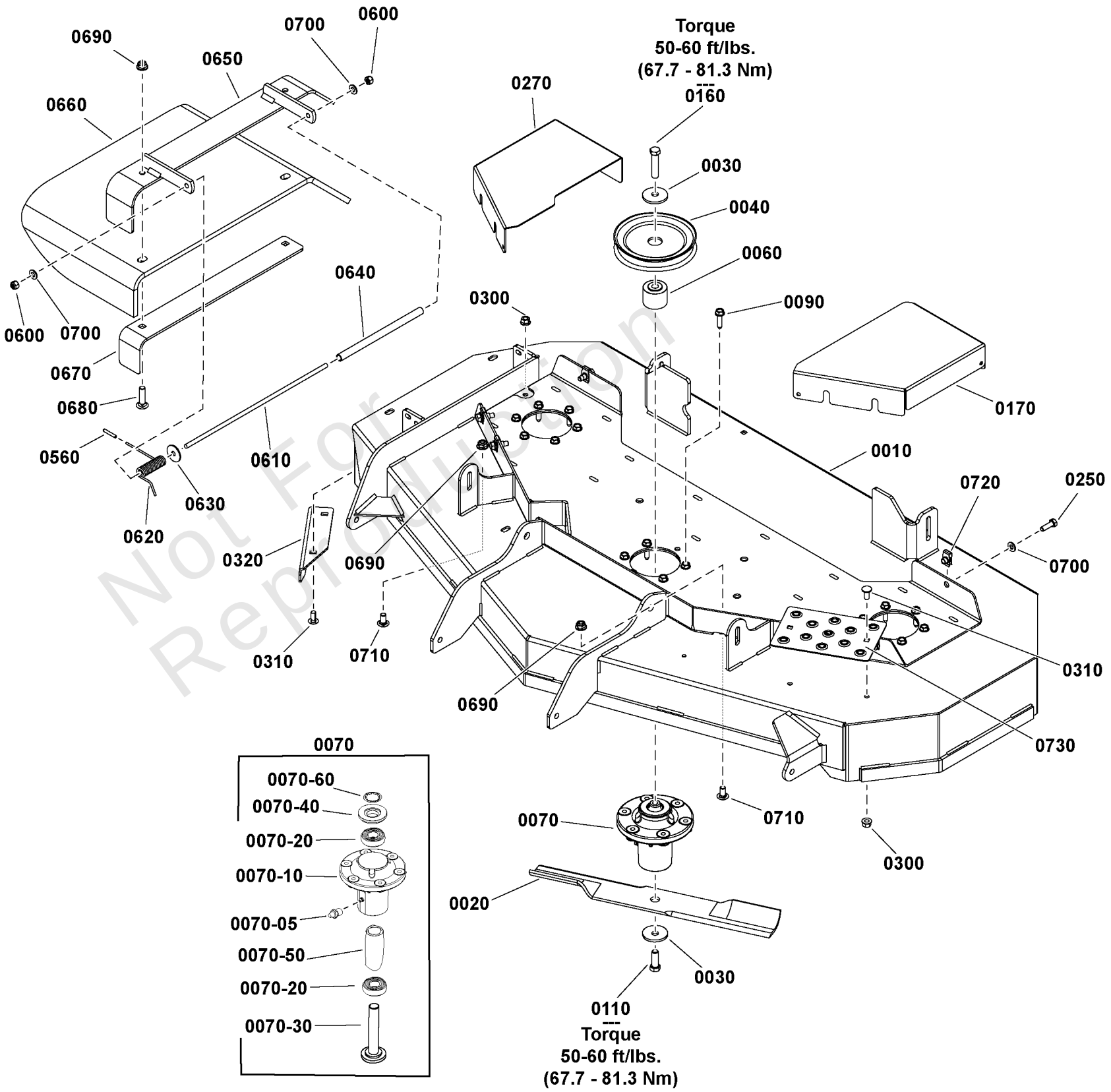

Not For Reproduction

Copyright © Briggs & Stratton. All Rights reserved

52" Mower Deck - Housing, Arbors & Blade Group

REF NO	PART NO	QTY	DESCRIPTION
0010	84006944	1	HOUSING, Mower Deck w/Decals, 52” FAB
0020	1756152AYP	3	BLADE, MOWER, 18IN
0030	1656916SM	6	WASHER, SPRING 0.475I
0040	84006898	3	PULLEY
0060	1759940YP	3	SPACER
0070	84003174	3	ARBOR ASSEMBLY
0070-05	1704314SM	1	LUBE FITTING, .250 DR
0070-10	84003653	1	HOUSING ASSEMBLY
0070-20	1735399YP	2	BEARING, Ball, 20mm
0070-30	84003655	1	SHAFT, Mower Spindle
0070-40	84003166	1	COVER, ARBOR
0070-50	84003167	1	SPACER, BEARING
0070-60	1960766YP	1	RING, SELF LOCKING
0090	703167	18	SCREW
0110	703579	3	HHCS, 7/16-14X1.25
0160	84007038	3	CAPSCREW, Hex Head, 7/16-14 X 2
0170	84007039	1	COVER, ARBOR
0250	5025011X8SM	6	CAPSCREW, Hex Head, 5/16-18 X 1
0270	84006931	1	COVER, ARBOR
0300	5025392SM	4	NUT, Ny Lock Flange, 5/16-18
0310	5025145X6SM	4	BOLT, 5/16-18 X 3/4",
0320	5405557YP	1	PLATE
0560	5023489SM	1	CAP, PROTECTOR, .120
0600	5025045SM	2	NUT, 5/16-24 HEX NYLO
0610	5042555SM	1	ROD, BRAKE LINKAGE
0620	5023385SM	1	SPRING, TORSION
0630	5025164SM	1	WASHER, 5/16" FENDER
0640	5050086X8SM	1	TORSION SPRING SPACER
0650	5413404AYP	1	MOUNT, Discharge
0660	5413498YP	1	CHUTE, Discharge
0670	5413401AYP	1	SUPPORT
0680	5025146X12YP	2	BOLT, 3/8-16 X 1-1/2
0690	5025394SM	4	NUT, 3/8-16 HEX NYLOCK
0700	5025155SM	8	WASHER, 5/16
0710	703448	2	BOLT, 3/8-16X.75 G5
0720	5022308SM	6	BODY CLIP, 5/16-18 X
0730	84006929	1	PLATE, BASE

Not For Reproduction

Copyright © Briggs & Stratton. All Rights reserved

Body & Fuel Tank Group

Note: Unless noted otherwise, use the standard torque specifications

Mfg. No: 2691814-01

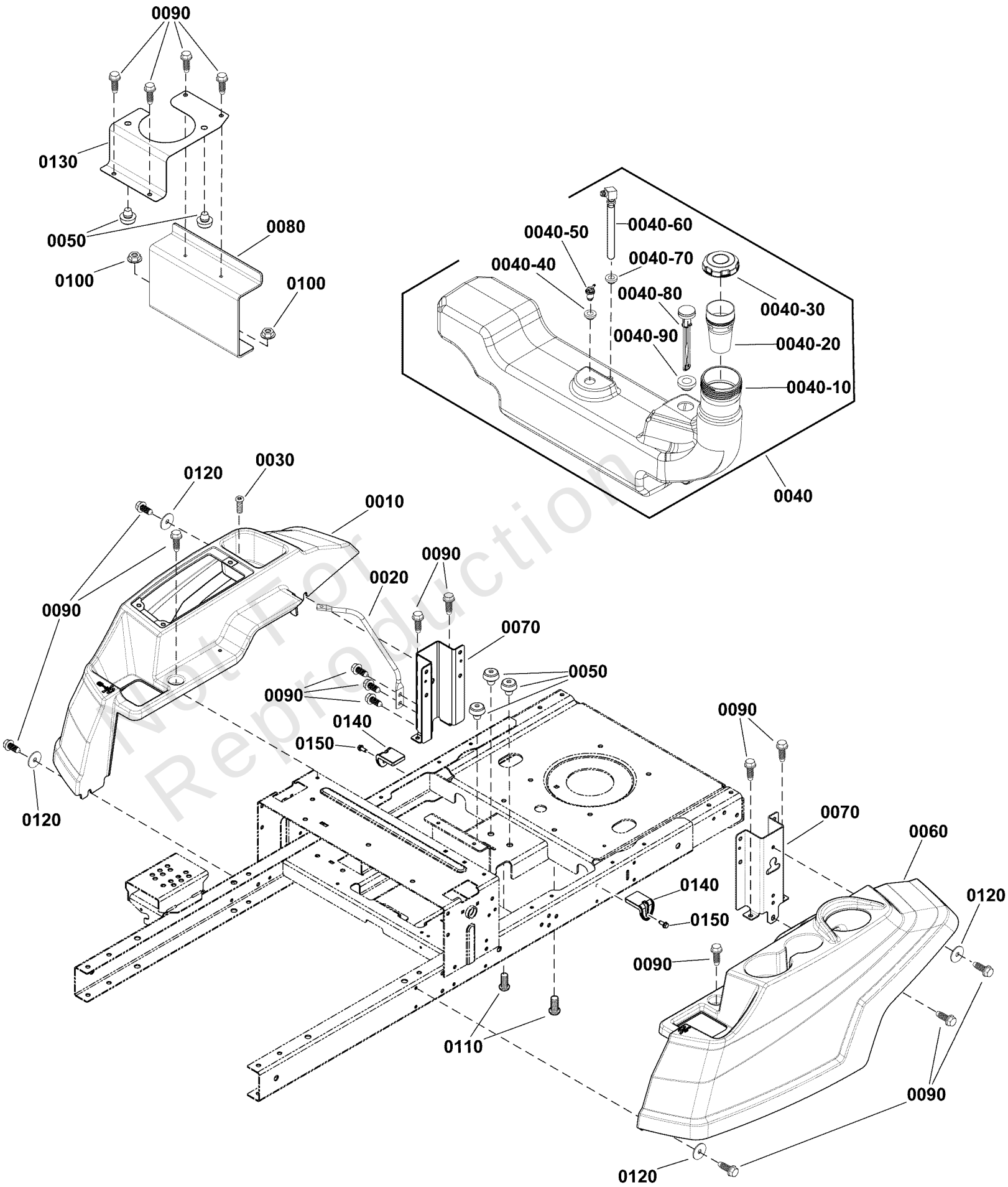

Not For Reproduction

Copyright © Briggs & Stratton. All Rights reserved

Body & Fuel Tank Group

REF NO	PART NO	QTY	DESCRIPTION
0010	84008779	1	FENDER, Right
0020	1759369YP	1	ROD, Support
0030	703953	1	SCREW, 1/4-20X5/8
0040	84004694	1	FUEL TANK ASSEMBLY -(Includes item Nos. 0040-10, 00410-20, 0040-30, 0040-40, 0040-50, 0040-60, 0040-70, 0040-80 & 0040-90)
0040-10	-----	1	TANK, Fuel -(Included with Ref. No. 0040)
0040-20	1758282YP	1	FILTER-FILLER NECK -(Included with Ref. No. 0040)
0040-30	1758314YP	1	CAP-FUEL TANK -(Included with Ref. No. 0040)
0040-40	799624	1	GROMMET -(Included with Ref. No. 0040)
0040-50	770046	1	VENT, Remote -(Included with Ref. No. 0040)
0040-60	1758927YP	1	TUBE-PICK UP -(Included with Ref. No. 0040)
0040-70	1726400SM	1	BUSHING -(Included with Ref. No. 0040)
0040-80	1758928YP	1	GAUGE-FUEL -(Included with Ref. No. 0040)
0040-90	84004692	1	GROMMET -(Included with Ref. No. 0040)
0050	197546GS	5	MOUNT-VIBRATION
0060	1758076YP	1	FENDER-LEFT
0070	1758239AYP	2	SUPPORT-FENDER
0080	84002196	1	BRACKET
0090	703228	18	SCREW, 5/16-18 X .75
0100	5025394SM	2	NUT, 3/8-16 HEX NYLOCK
0110	704038	2	SCREW
0120	1960044SM	4	WASHER-0.312(0.33IDX1
0130	1759140AYP	1	STRAP-FUEL TANK
0140	1760244YP	2	SUPPORT, Fuel Tank
0150	703054	2	SCREW, 1/4-20X0.625

Not For Reproduction

Copyright © Briggs & Stratton. All Rights reserved

Note: Unless noted otherwise, use the standard torque specifications

Mfg. No: 2691814-01

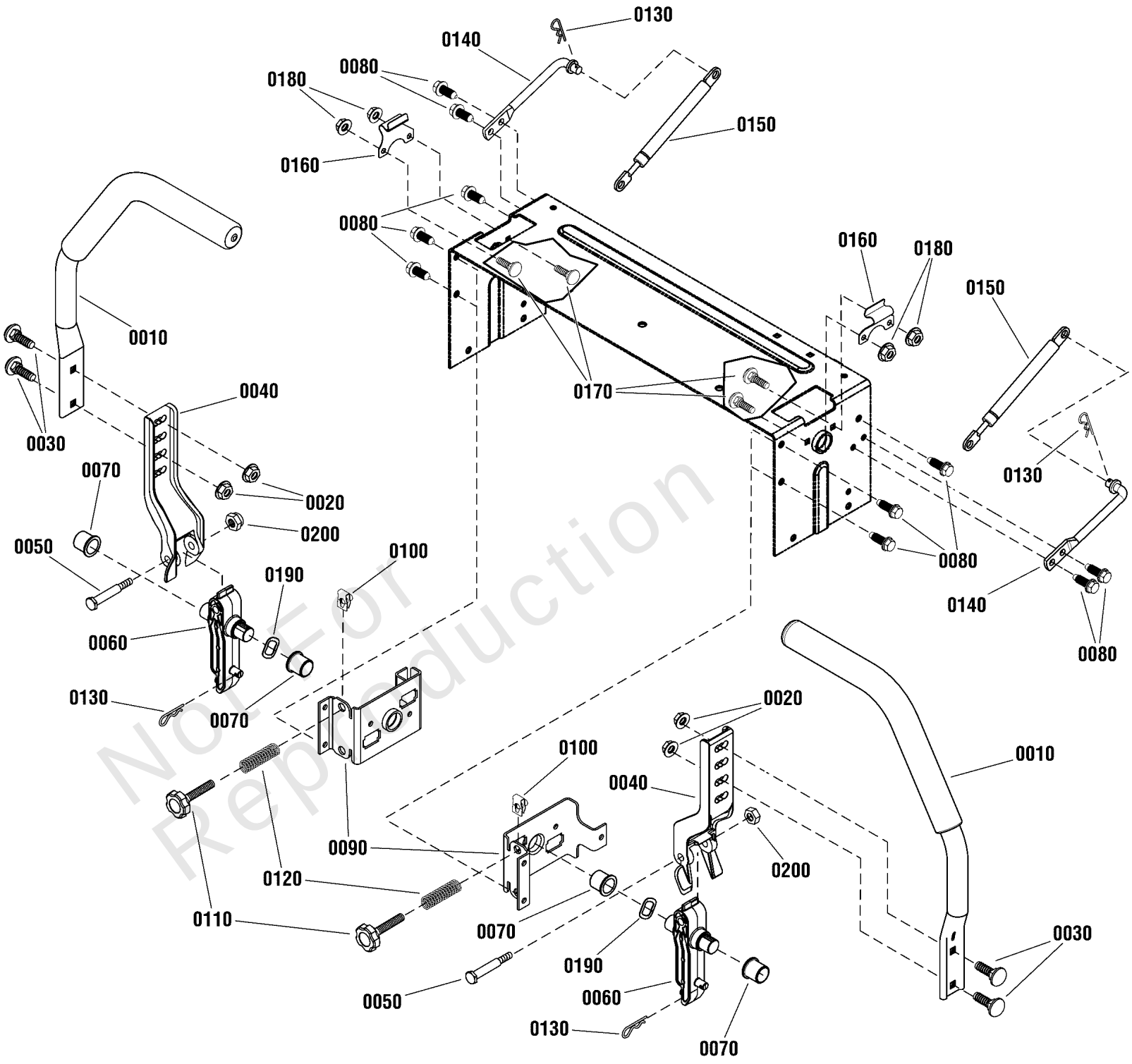

Not For Reproduction

Copyright © Briggs & Stratton. All Rights reserved

Controls Group

REF NO	PART NO	QTY	DESCRIPTION
0010	1758372YP	2	HANDLE, CONTROL
0020	703115	4	NUT
0030	703483	4	BOLT,5/16-18X1.000,RO
0040	1757965YP	2	ARM, UPPER CONTROL
0050	707624	2	BOLT,SHLDR,5/16-18
0060	1757964YP	2	ARM, LOWER CONTROL
0070	2176440SM	4	BUSHING-0.765IDX
0080	703949	10	SCREW, 5/16-18.625
0090	1758087AYP	2	PIVOT, Inner Control
0100	5022308SM	2	BODY CLIP, 5/16-18 X
0110	1758373YP	2	KNOB, 5/16-18 X 2.5
0120	1650347SM	2	SPRING-COMP 0.50 IDX
0130	5025211SM	4	PIN, HAIR, .0585" X 1
0140	1758463YP	2	ROD, DAMPNER MNT
0150	84001625	2	DAMPENER
0160	1759182YP	2	LATCH, CONTROL ARM
0170	703101	4	BOLT,1/4-20X.75
0180	703463	4	NUT, GR5,1/4-20
0190	707625	2	WSHR, 3 WAVE, .750
0200	703902	2	NUT, HEX, 5/16-18

Not For Reproduction

Copyright © Briggs & Stratton. All Rights reserved

Note: Unless noted otherwise, use the standard torque specifications

Mfg. No: 2691814-01

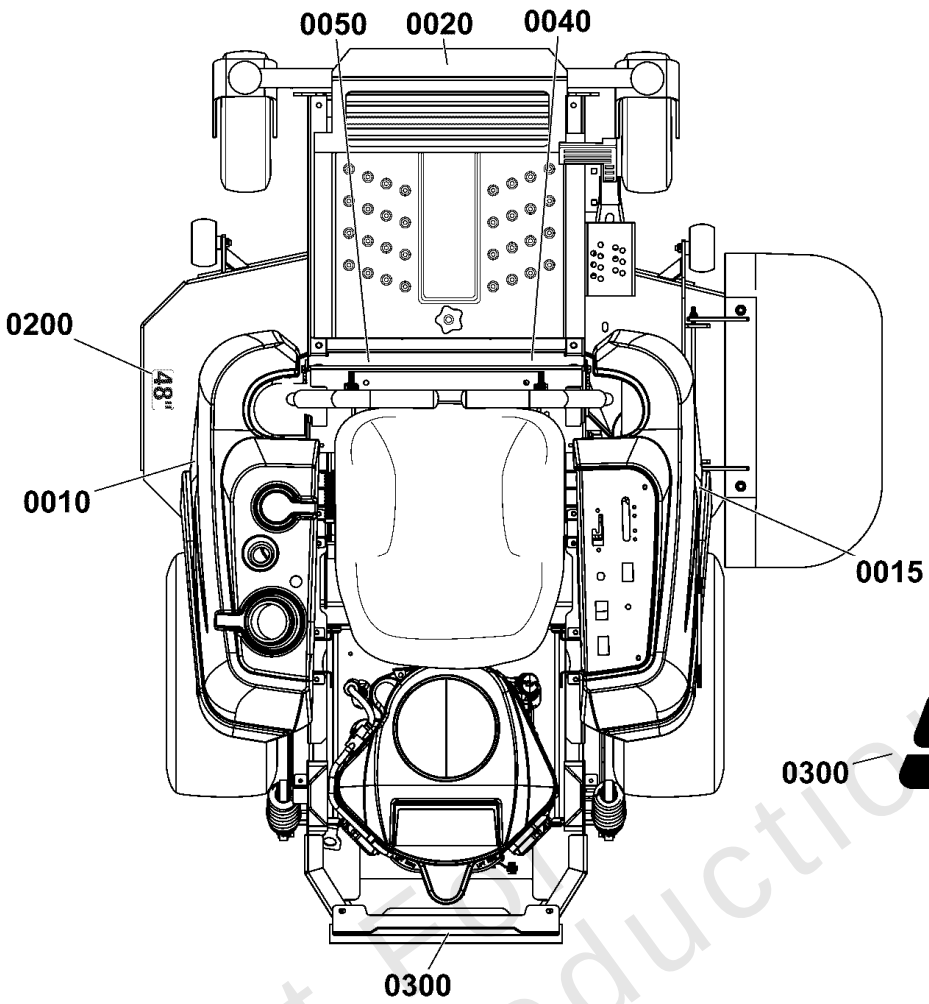

0200

52"
132cm

0040

COURIER XT

0050

SCS
SUSPENSION COMFORT SYSTEM

0300

Simplicity

0010

Simplicity

Simplicity

0015

0020

Simplicity

Not for Reproduction

Copyright © Briggs & Stratton. All Rights reserved

Decals Group - Brand & Model

REF NO	PART NO	QTY	DESCRIPTION
0010	1760168YP	1	DECAL, Simplicity Logo, LH Fender, 15.7” x 3.7”
0015	1760169YP	1	DECAL, Simplicity Logo, RH Fender, 15.7” x 3.7”
0020	1757673YP	1	DECAL, SMI LOGO 10.47
0040	84006940	1	DECAL, Courier, XT
0050	1758877YP	1	DECAL, SCS
0200	1755721YP	1	DECAL, 52"/132cm
0300	1755725YP	1	DECAL, Simplicity Logo, Silver

Not For Reproduction

Copyright © Briggs & Stratton. All Rights reserved

Decals Group - Safety & Operation

Note: Unless noted otherwise, use the standard torque specifications

Mfg. No: 2691814-01

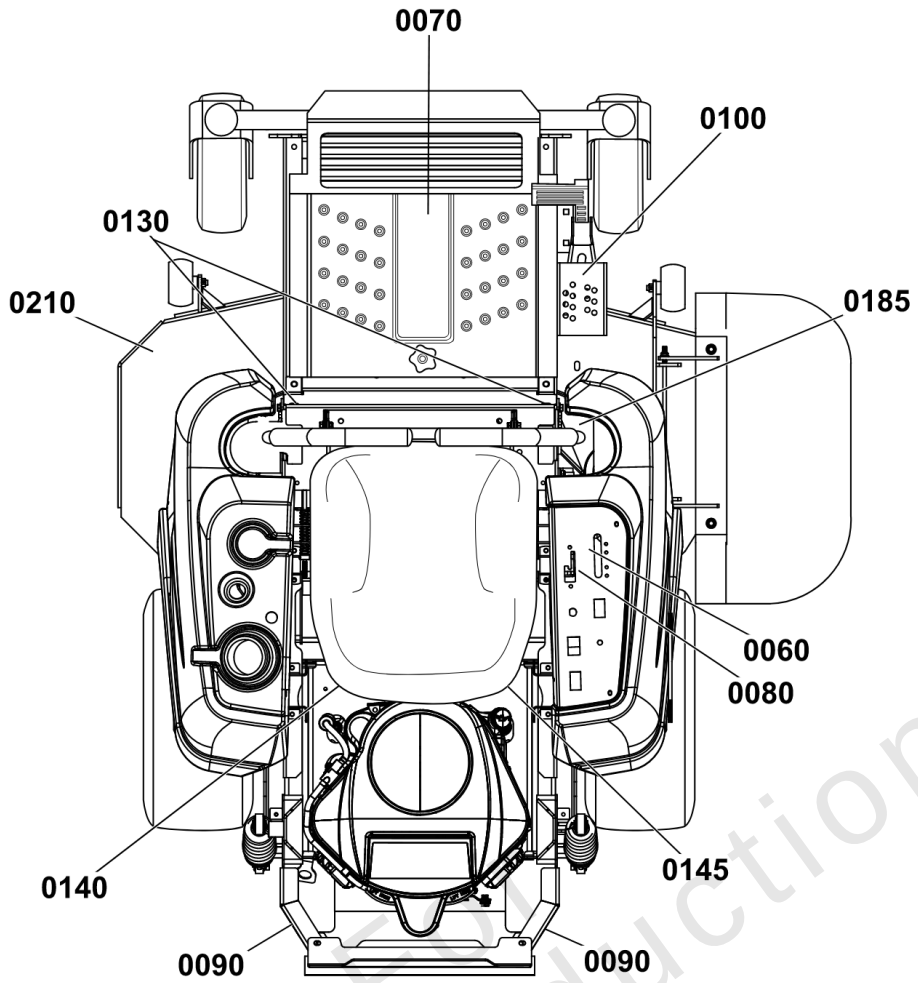

0070

DANGER

Amputation hazard

Rotating blades cut off arms and legs.

- Stop the mower when children or others are near.
- Do not carry riders (especially children) even with the blades off. They may fall off or return for another ride when you are not expecting it.
- Look down, behind and to the side before changing directions.

Loss of control and roll-over hazard

Operating on slopes can be hazardous and cause loss of control and roll-overs.

10° Max.

- Do not operate on slopes over 10 degrees.
- Avoid sudden turns or rapid speed changes.
- Reduce speed and use extreme caution on slopes.
- Avoid turning down slopes; if possible turn up slopes.
- If machine stops forward motion on a slope, stop the blades and drive slowly off the slope.

Water, retaining walls and drop-off hazards

Wheels dropping over edges may result in serious injury, death or drowning.

- Do NOT operate down slope towards or near water, retaining walls or drop-offs.
- Give yourself a minimum of two mower widths of clearance around these hazards.

WARNING

Fire hazard

Gasoline is flammable. Yard debris is combustible.

- Allow engine to cool for at least 3 minutes before refueling.
- Keep unit cleaned of debris.
- This equipment may create sparks that can start fires around dry vegetation. A spark arrester may be required. Contact local fire agencies for regulations relating to fire prevention requirements.

Avoid serious injury or death

Read the operator's manual before using this product.

- Do NOT operate this machine unless you are trained.
- Know the location and function of all controls.
- Keep safety devices (guards, shields, switches, etc.) in place and working.
- Remove objects that could be thrown by the blade.
- Be sure blade(s) and engine are stopped before placing hands or feet near blade(s).
- When leaving machine, shut off, remove key, and set parking brake.

5106564 B

CAN ICES-2/NMB-2

0060

0080

0100

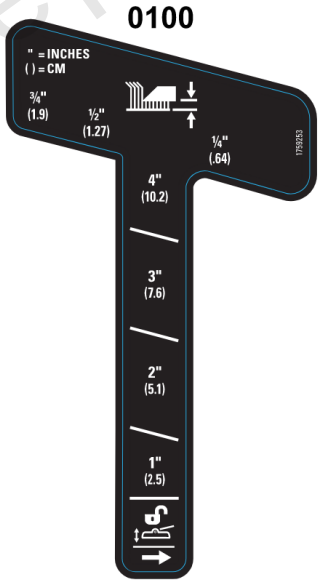

0130

0185

0210

DANGER

Amputation and thrown objects hazard

- Keep hands and feet away from deck.
- Do not operate mower unless discharge chute or entire grass catcher is in its proper place.

7101665

0145

HYDRAULIC OIL

USE SAE 20W-50 MOTOR OIL

5100957

0140

Belts & Blades

Transmission Drive Belt	
Rear - Fixed Frame	84006539
Rear - Suspension	885714YP
52" Mower	
Deck Drive Belt	84006540
Mower Blade	1756152AYP
61" Mower	
Deck Drive Belt	84006541
Mower Blade	5104045YP

80097406

0090

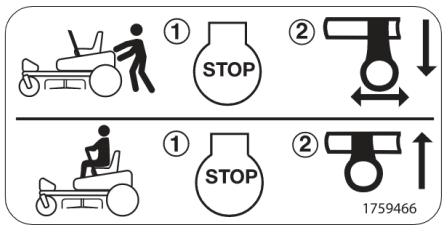

Not For Reproduction

Copyright © Briggs & Stratton. All Rights reserved

Decals Group - Safety & Operation

REF NO	PART NO	QTY	DESCRIPTION
0060	7105868YP	1	DECAL, ENGINE SPEED
0070	84003344	1	DECAL, MAIN, SAFETY
0080	84007063	1	DECAL, Parking Brake
0090	1759466YP	2	DECAL
0100	84007064	1	DECAL, Height of Cut
0130	1759724YP	2	DECAL, Tracking Adjustment - ZT
0140	84007062	1	DECAL, Service Parts
0145	84002270	1	DECAL, Oil
0185	84011099	1	DECAL, Integrated Parking Brake
0210	7101665YP	2	DECAL, DANGER

Not For Reproduction

Copyright © Briggs & Stratton. All Rights reserved

Electrical Group

Note: Unless noted otherwise, use the standard torque specifications

Mfg. No: 2691814-01

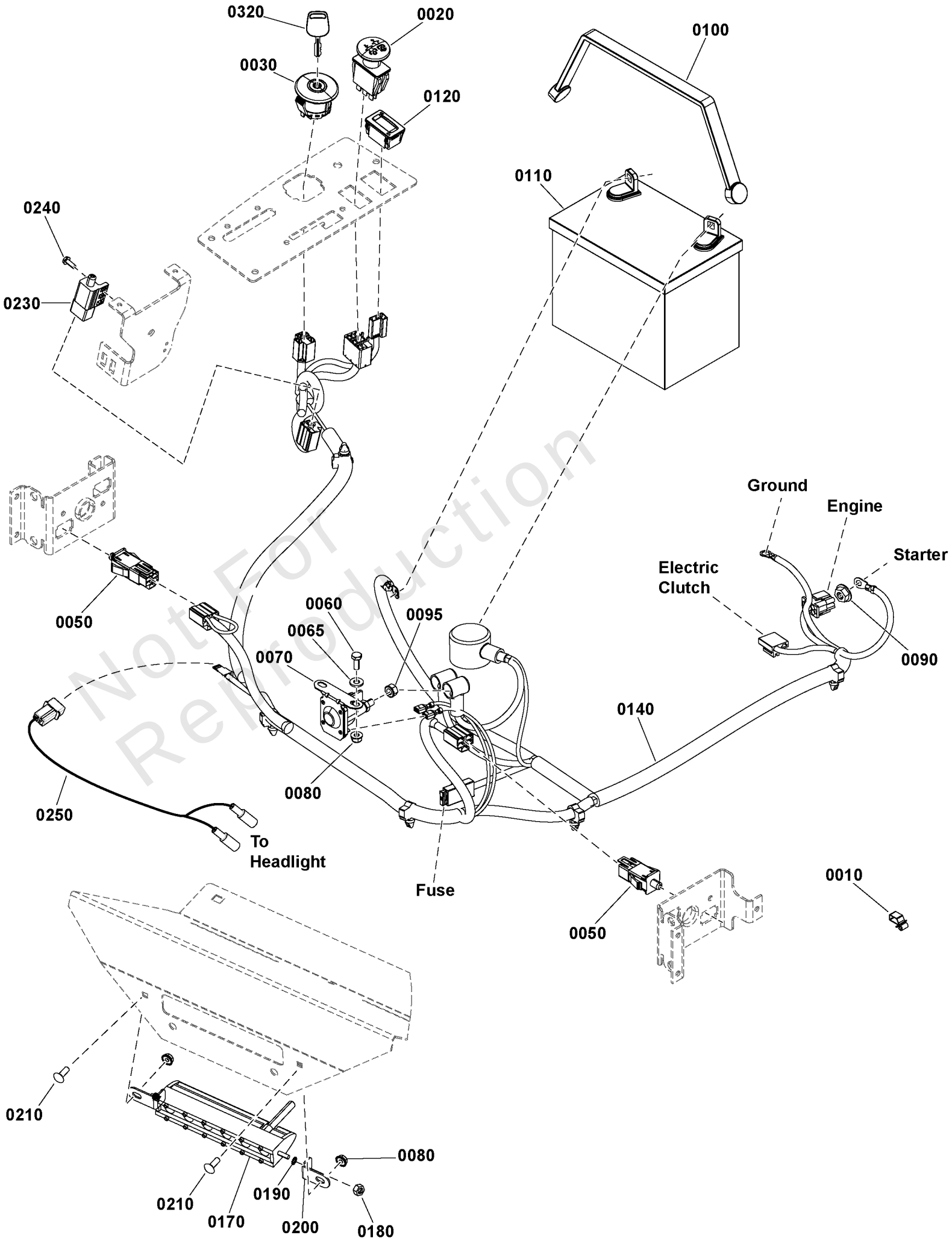

Not For Reproduction

Copyright © Briggs & Stratton. All Rights reserved

Electrical Group

REF NO	PART NO	QTY	DESCRIPTION
0010	2172434SM	3	CLIP- WIRE DIA .390
0020	1722887SM	1	SWITCH-PTO PUSH
0030	7106169YP	1	SWITCH, IGNITION, DEL
0050	7022886YP	2	SWITCH, DP NO/NC SNAP
0060	703338	2	BOLT,1/4-20X5/8
0065	84007033	2	WASHER
0070	772333	1	SOLENOID, Starter
0080	5025391	4	NUT, 1/4-20 Hex Nylock Flange
0090	703061	1	NUT, HEX KEPS, 1/4-20
0095	2860750SM	2	NUT-HEX KEPS 5/16-24
0100	1722009SM	1	STRAP, Rubber, 13”
0110	-----	1	BATTERY, 12 VOLT, 230 CCA
0120	1731185SM	1	METER-HOUR DIGITAL NO
0140	84006894	1	HARNESS, WIRING
0170	84006903	1	HEADLIGHT ASSEMBLY
0180	84007034	2	NUT, Hex, M5X.8MM, Nylon Insert
0190	84007035	2	WASHER, 5MM, Star
0200	84007036	2	BRACKET, L Headlight Mount
0210	703575	2	BOLT, 1/4-20X.750, SQ
0230	1717050SM	1	SWITCH-PUSH BUTT
0240	704060	2	SCREW,HEX, #10-24X.5
0250	84006895	1	HARNESS, Headlight Jumper
0320	7106170YP	1	KEY, Ignition Switch, Pack of 2, NA/AU

Not For Reproduction

Copyright © Briggs & Stratton. All Rights reserved

Electrical Schematic - Charging Circuit - B&S 44C777 & 44T977

Note: Unless noted otherwise, use the standard torque specifications

Mfg. No: 2691814-01

80097605 MAIN WIRE HARNESS - BRIGGS & STRATTON 44C777 & 44T977 ENGINES

80097605A

(If internal schematic of the switch is not shown, the image of the switch represents the back view of the connector as it is connected to the switch.)

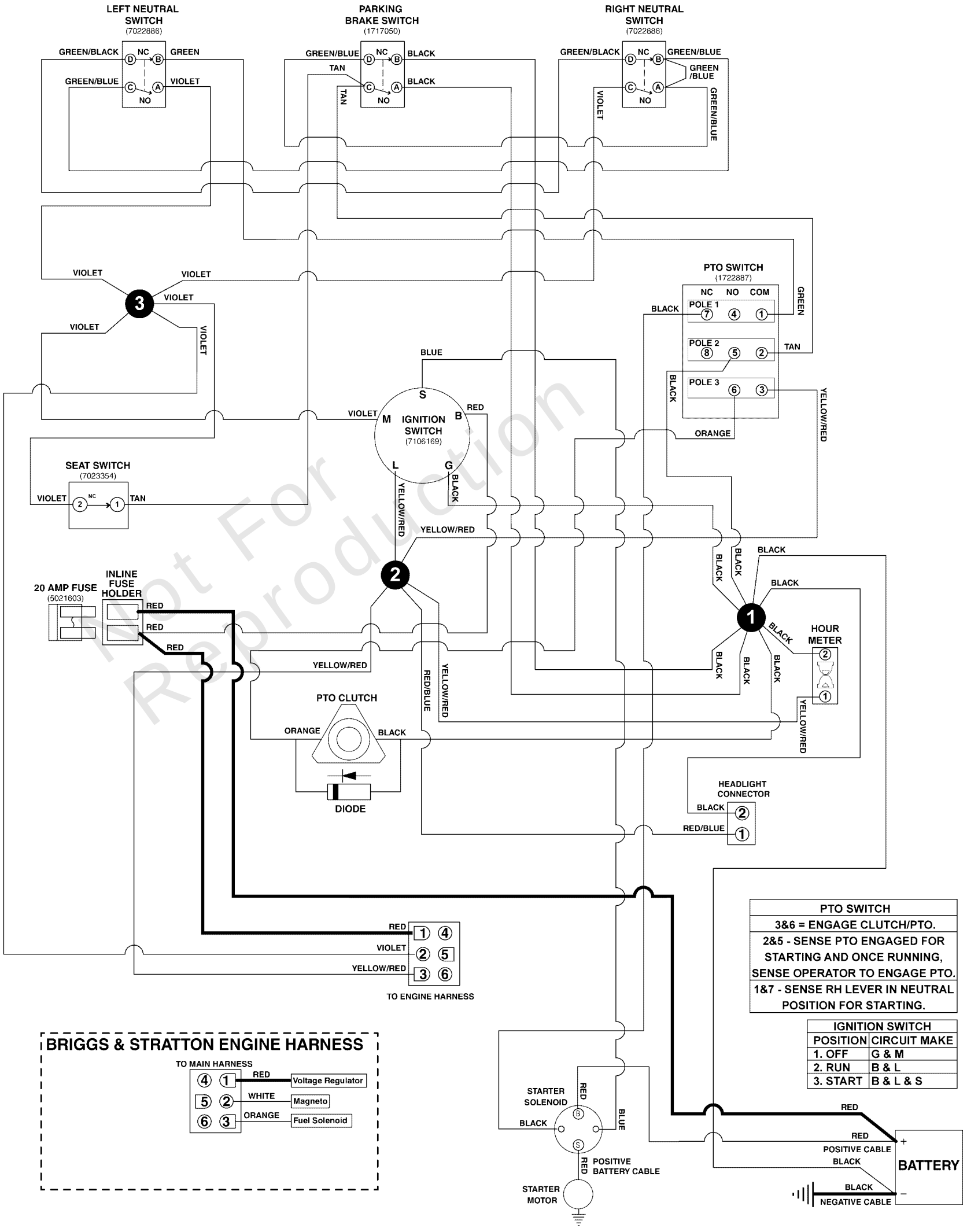

Not For Reproduction

Electrical Schematic - Charging Circuit - B&S 44C777 & 44T977

REF NO	PART NO	QTY	DESCRIPTION
80097605	84006894	1	HARNESS, WIRING
7022886	7022886YP	2	SWITCH, DP NO/NC SNAP
1717050	1717050SM	1	SWITCH-PUSH BUTT
1722887	1722887SM	1	SWITCH-PTO PUSH
7106169	7106169YP	1	SWITCH, IGNITION, DEL
7023354	7023354YP	1	SWITCH, SEAT
5021603	5021603SM	1	FUSE, ATO, 20 AMP

Not For Reproduction

Copyright © Briggs & Stratton. All Rights reserved

Note: Unless noted otherwise, use the standard torque specifications

Mfg. No: 2691814-01

80097605 MAIN WIRE HARNESS - BRIGGS & STRATTON 44C777 & 44T977 ENGINES

80097605A

(If internal schematic of the switch is not shown, the image of the switch represents the back view of the connector as it is connected to the switch.)

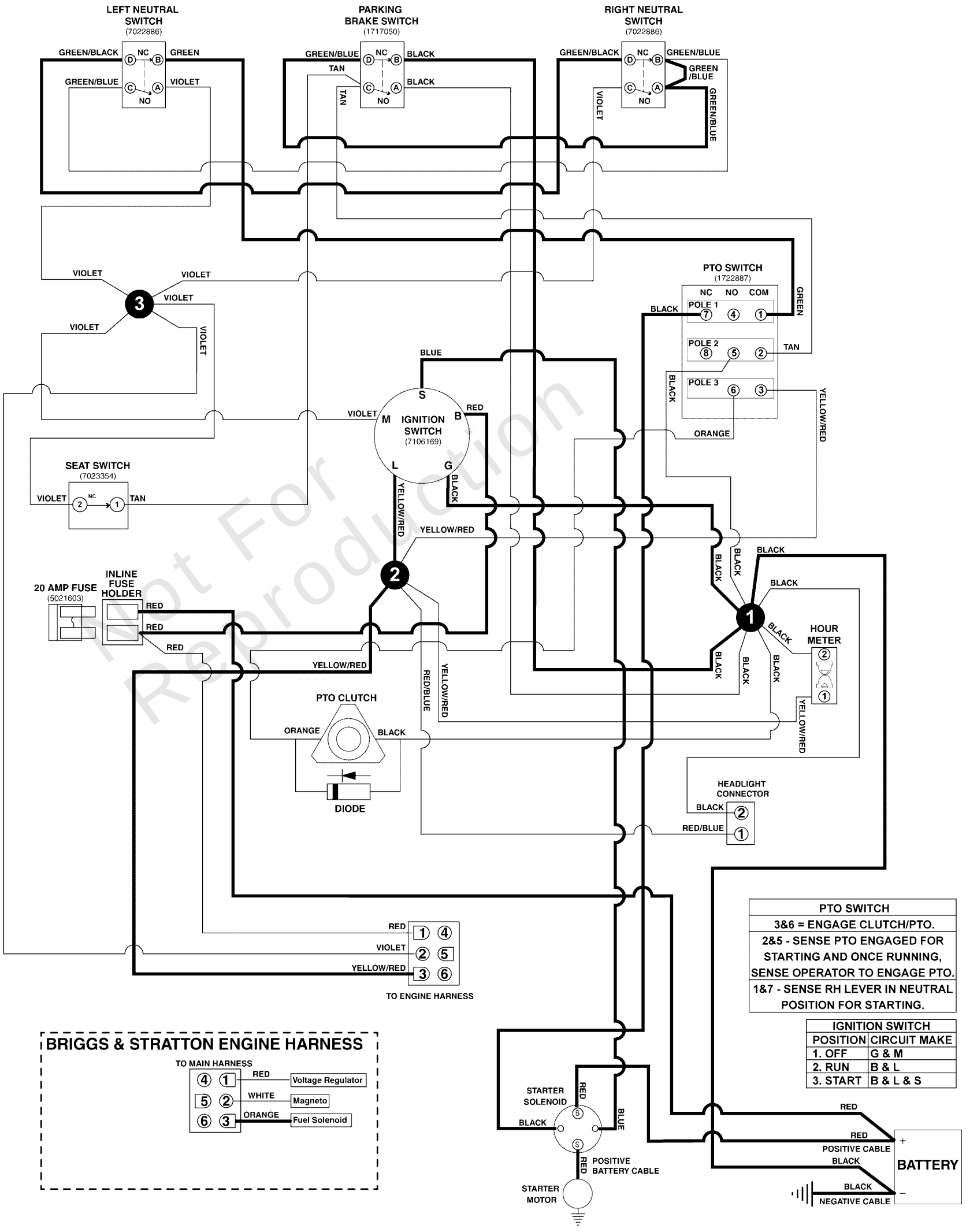

Not For Reproduction

Electrical Schematic - Cranking Circuit - B&S 44C777 & 44T977

REF NO	PART NO	QTY	DESCRIPTION
80097605	84006894	1	HARNESS, WIRING
7022886	7022886YP	2	SWITCH, DP NO/NC SNAP
1717050	1717050SM	1	SWITCH-PUSH BUTT
1722887	1722887SM	1	SWITCH-PTO PUSH
7106169	7106169YP	1	SWITCH, IGNITION, DEL
7023354	7023354YP	1	SWITCH, SEAT
5021603	5021603SM	1	FUSE, ATO, 20 AMP

Not For Reproduction

Copyright © Briggs & Stratton. All Rights reserved

Electrical Schematic - Ignition Grounding Circuit/Op. Pres. - B&S 44C777 & 44T977

Note: Unless noted otherwise, use the standard torque specifications

Mfg. No: 2691814-01

80097605 MAIN WIRE HARNESS - BRIGGS & STRATTON 44C777 & 44T977 ENGINES

80097605A

(If internal schematic of the switch is not shown, the image of the switch represents the back view of the connector as it is connected to the switch.)

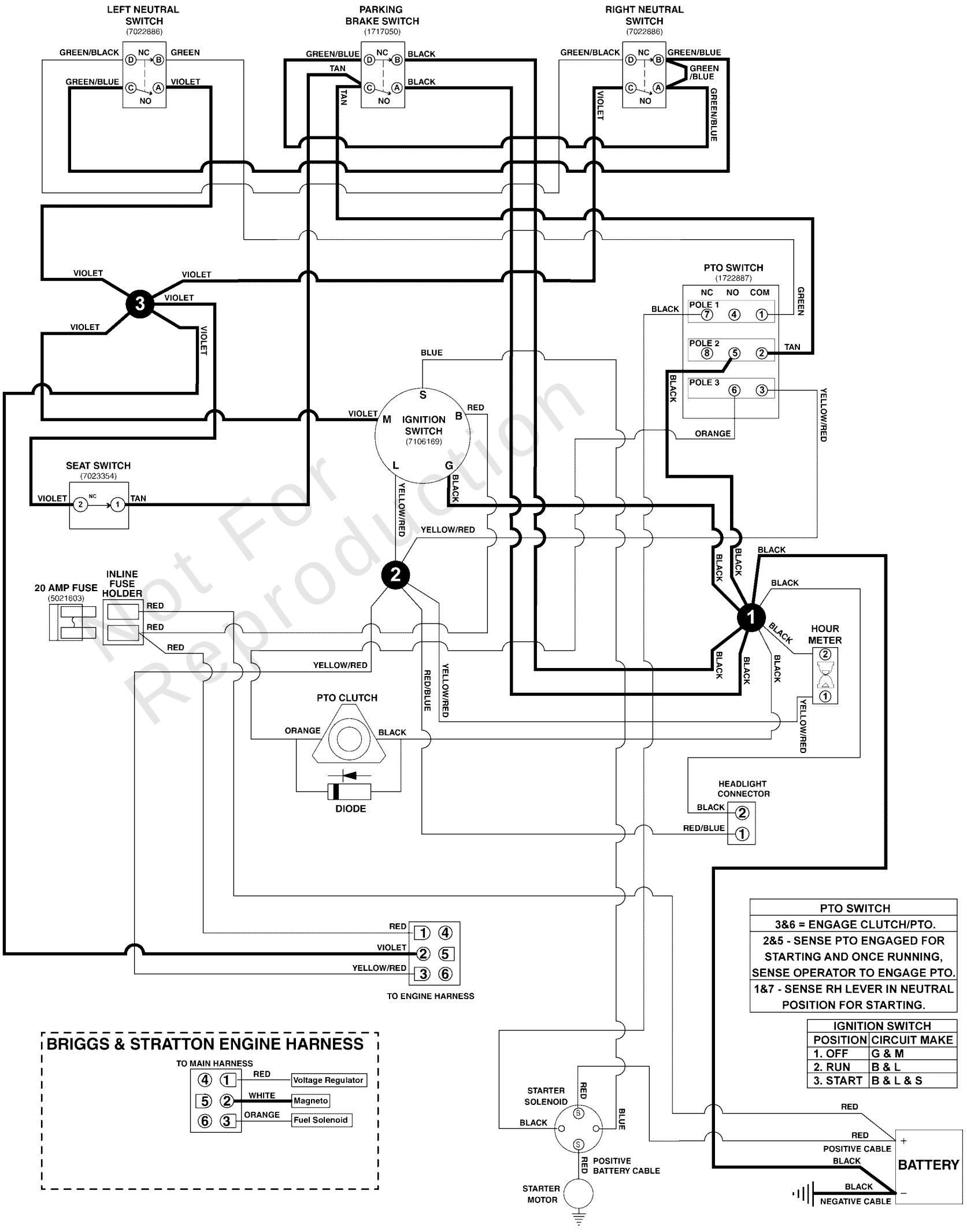

Not For Reproduction

Electrical Schematic - Ignition Grounding Circuit/Op. Pres. - B&S 44C777 & 44T977

REF NO	PART NO	QTY	DESCRIPTION
80097605	84006894	1	HARNESS, WIRING
7022886	7022886YP	2	SWITCH, DP NO/NC SNAP
1717050	1717050SM	1	SWITCH-PUSH BUTT
1722887	1722887SM	1	SWITCH-PTO PUSH
7106169	7106169YP	1	SWITCH, IGNITION, DEL
7023354	7023354YP	1	SWITCH, SEAT
5021603	5021603SM	1	FUSE, ATO, 20 AMP

Not For Reproduction

Copyright © Briggs & Stratton. All Rights reserved

Electrical Schematic - PTO Clutch Circuit - B&S 44C777 & 44T977

Note: Unless noted otherwise, use the standard torque specifications

Mfg. No: 2691814-01

80097605 MAIN WIRE HARNESS - BRIGGS & STRATTON 44C777 & 44T977 ENGINES

80097605A

(If internal schematic of the switch is not shown, the image of the switch represents the back view of the connector as it is connected to the switch.)

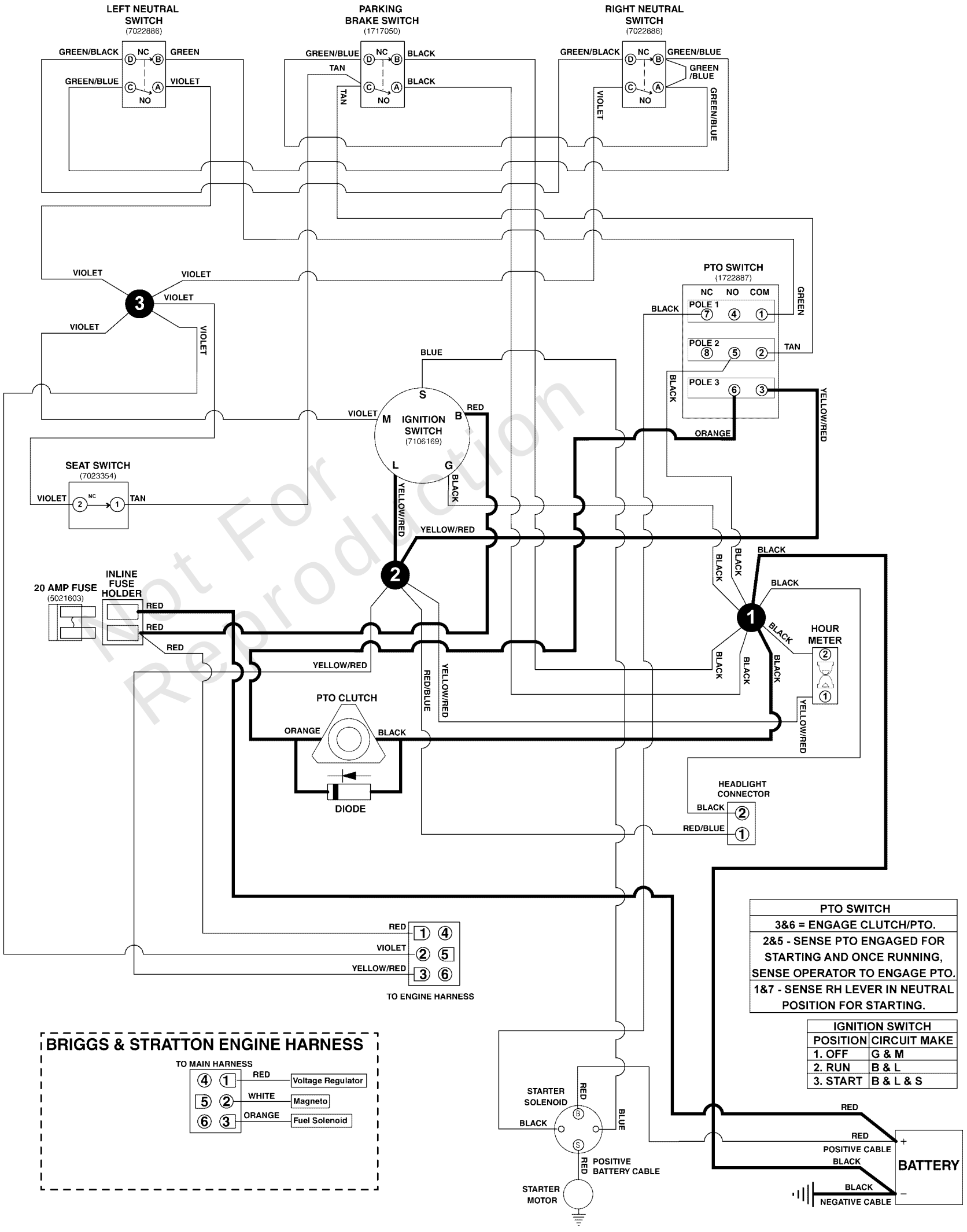

PTO SWITCH
3&6 = ENGAGE CLUTCH/PTO.
2&5 - SENSE PTO ENGAGED FOR STARTING AND ONCE RUNNING, SENSE OPERATOR TO ENGAGE PTO.
1&7 - SENSE RH LEVER IN NEUTRAL POSITION FOR STARTING.

IGNITION SWITCH	
POSITION	CIRCUIT MAKE
1. OFF	G & M
2. RUN	B & L
3. START	B & L & S

Not For Reproduction

Electrical Schematic - PTO Clutch Circuit - B&S 44C777 & 44T977

REF NO	PART NO	QTY	DESCRIPTION
80097605	84006894	1	HARNESS, WIRING
7022886	7022886YP	2	SWITCH, DP NO/NC SNAP
1717050	1717050SM	1	SWITCH-PUSH BUTT
1722887	1722887SM	1	SWITCH-PTO PUSH
7106169	7106169YP	1	SWITCH, IGNITION, DEL
7023354	7023354YP	1	SWITCH, SEAT
5021603	5021603SM	1	FUSE, ATO, 20 AMP

Not For Reproduction

Copyright © Briggs & Stratton. All Rights reserved

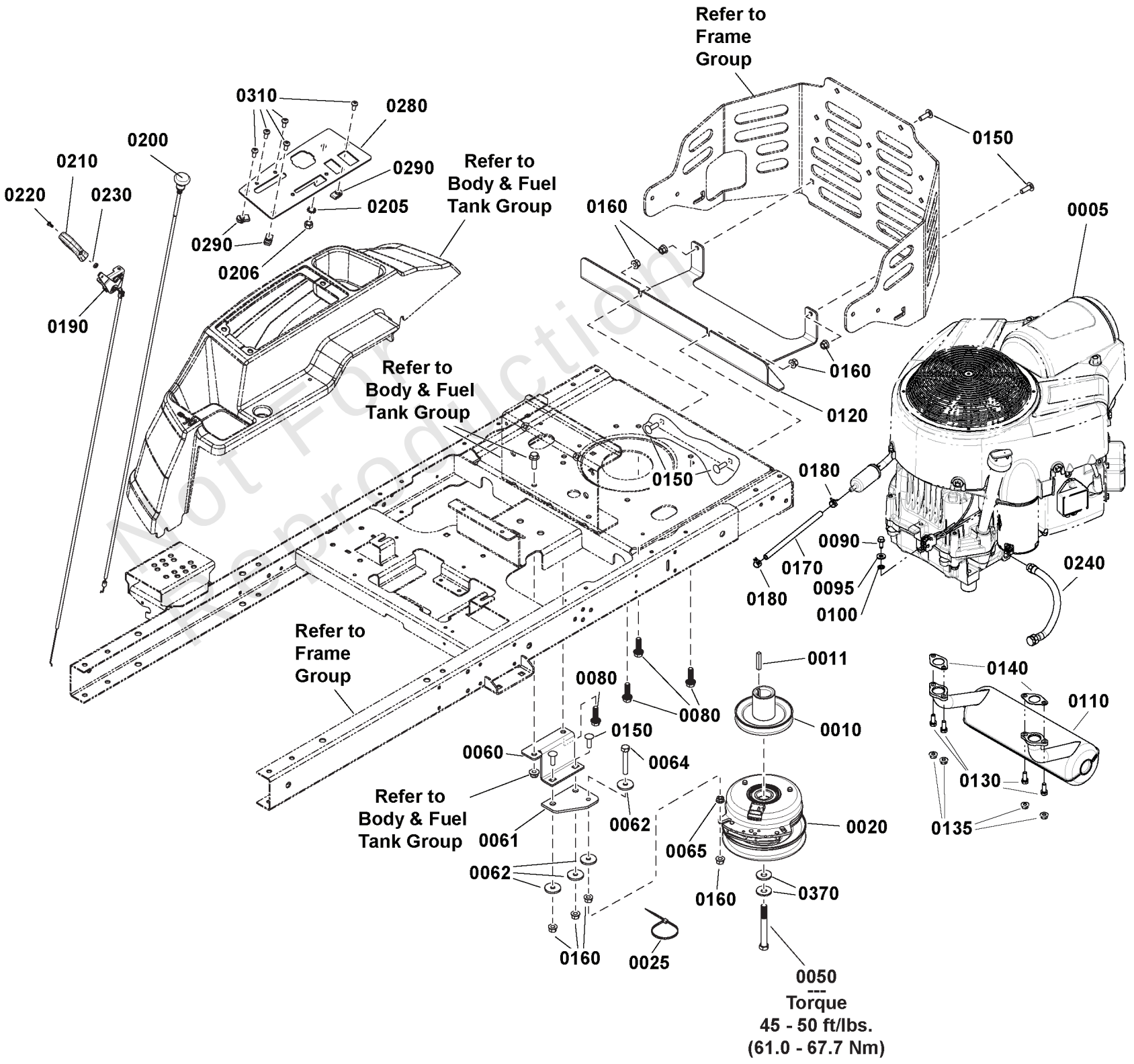

Not For Reproduction

Engine Group

REF NO	PART NO	QTY	DESCRIPTION
0005	-----	1	Engine, Briggs & Stratton CXi -(Refer to Note: *) (Engine Model: 44T977-0005-G1)
0010	84007555	1	PULLEY, CRANKSHAFT
0011	5022726YP	1	KEY 1/4 SQ X 1 1/2
0020	84006960	1	CLUTCH
0025	5021030SM	1	TIE WRAP, 5-1/2" LONG
0050	84007266	1	BOLT
0060	84007267	1	BRACKET
0061	84007268	1	PAD
0062	5044617SM	4	WASHER, .34 X 1.25 X
0064	5025055X18YP	1	BOLT, 5/16-18 X 2-1/4
0065	5025127SM	1	NUT, 5/16-18 HEX SERR
0080	2828635SM	4	SCREW-HEX WSHR HD TAP
0090	703054	1	SCREW, 1/4-20X0.625
0095	84007033	1	WASHER
0100	1921880SM	1	LOCKWASHER-EXTERNALTO
0110	1758350YP	1	MUFFLER
0120	84006923	1	HEATSHIELD
0130	690341	4	SCREW -(Refer to Note: **)
0135	690941	4	NUT -(Refer to Note: ***)
0140	690970	2	GASKET, Exhaust
0150	703800	6	BOLT, CRRG, 5/16-18X1
0160	5025392SM	8	NUT, Ny Lock Flange, 5/16-18
0170	5050831X11YP	1	HOSE, 1/4" FUEL, 11.00"
0180	93807	2	CLAMP, Hose
0190	1759205YP	1	CONTROL-THROTTLE
0200	5100184SM	1	CABLE, CHOKE CONTROL,
0205	703864	1	WASHER, EXT, 3/8
0206	703895	1	NUT, HEX, 3/8-24
0210	1739312YP	1	KNOB, THROTTLE
0220	797483	1	SCREW
0230	703460	1	NUT, Hex #8-32
0240	1726498SM	1	HOSE-OIL DRAIN .375ID
0280	84006920	1	PANEL, CONTROL
0290	5022665SM	3	BODY CLIP, 1/4-20 X 1
0310	703953	5	SCREW, 1/4-20X5/8
0370	5025585YP	2	BELLEVILLE WASHER

Not For Reproduction

Footnotes:

Note:*** If your engine has muffler studs
Note:** If your engine does not have muffler studs
Note:* See your local Briggs & Stratton distributor for parts & service.

Copyright © Briggs & Stratton. All Rights reserved

EVAP Group

Note: Unless noted otherwise, use the standard torque specifications

Mfg. No: 2691814-01

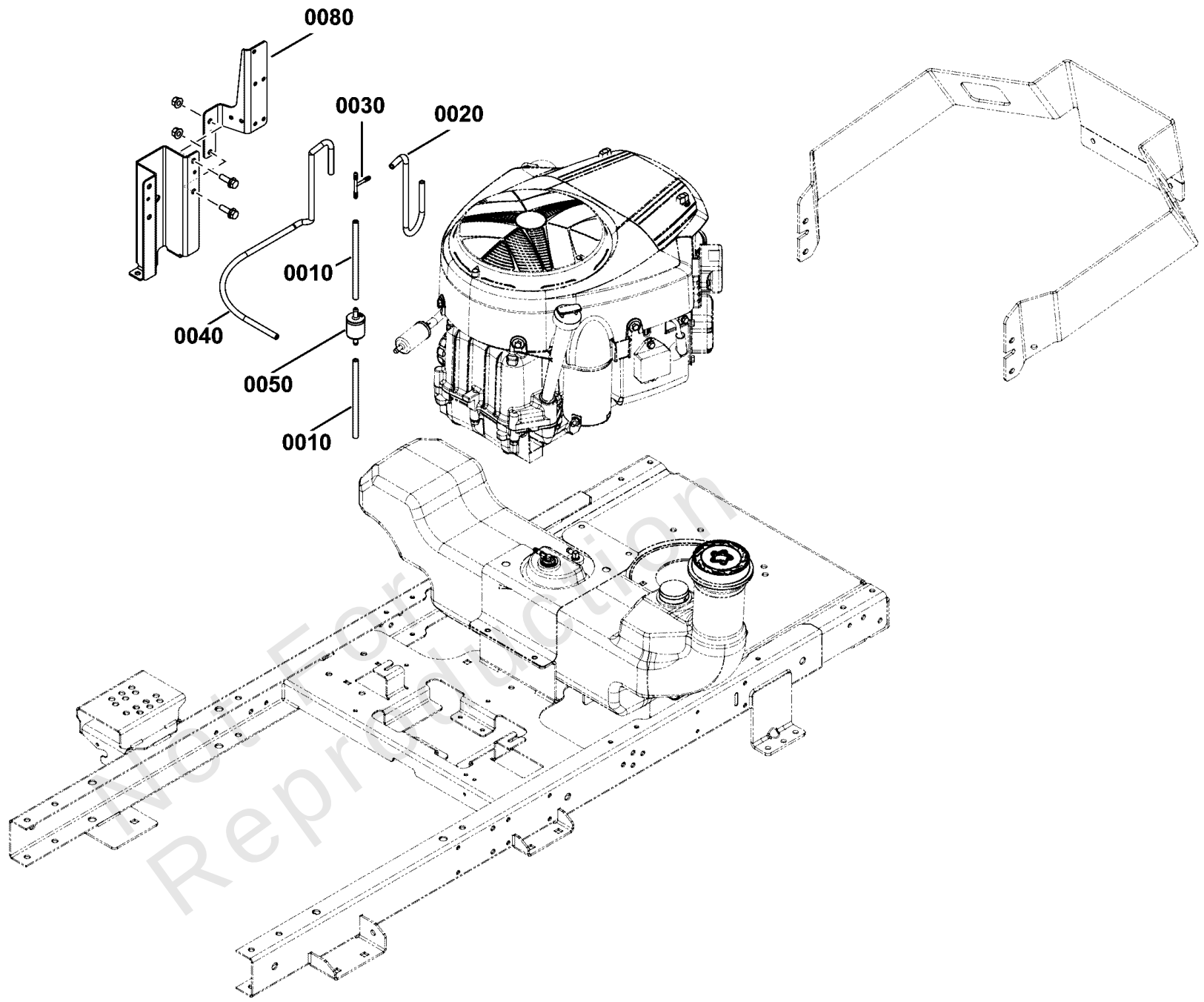

Not For Reproduction

Copyright © Briggs & Stratton. All Rights reserved

EVAP Group

REF NO	PART NO	QTY	DESCRIPTION
0010	7700552X6YP	2	HOSE-VAPOR
0020	7700552X12YP	1	HOSE, VAPOR,5MM ID,12
0030	5103062YP	1	FITTING, 3/16" TEE, B
0040	7700552X26YP	1	HOSE, Vapor, 5 MM ID, 26.00 LG
0050	84001895	1	FILTER, Fuel
0070	5021030SM	5	TIE WRAP, 5-1/2" LONG -(Not Illustrated)
0080	1760538AYP	1	BRACKET

Not For Reproduction

Copyright © Briggs & Stratton. All Rights reserved

Frame Group

Note: Unless noted otherwise, use the standard torque specifications

Mfg. No: 2691814-01

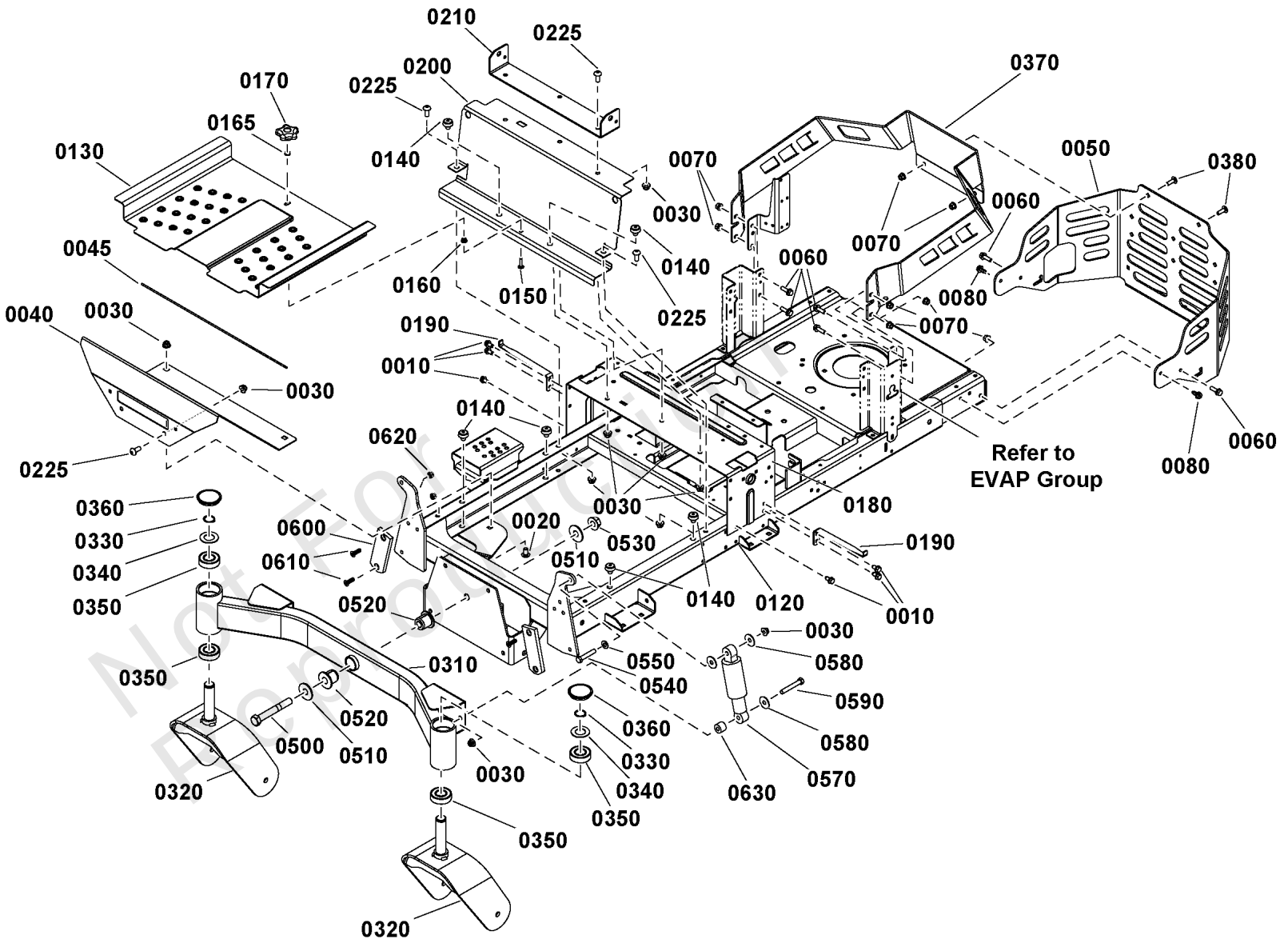

Not For Reproduction

Copyright © Briggs & Stratton. All Rights reserved

Frame Group

REF NO	PART NO	QTY	DESCRIPTION
0010	703949	6	SCREW, 5/16-18.625
0020	703448	2	BOLT, 3/8-16X.75 G5
0030	5025394SM	13	NUT, 3/8-16 HEX NYLOCK
0040	84006905	1	FOOT REST, XT
0045	5101011SM	1	SAFETY WALK, 8.00 X 1
0050	84006907	1	BUMPER, Rear, XT
0060	703410	6	BOLT,5/16-18X1
0070	5025392SM	8	NUT, Ny Lock Flange, 5/16-18
0080	703228	2	SCREW, 5/16-18 X .75
0120	-----	1	FRAME, Suspension -(Not a serviceable part)
0130	1757813CYP	1	PAN, Foot
0140	197546GS	6	MOUNT-VIBRATION
0150	7090496YP	1	RHSSNB, 1/4C X1 GR5 Z
0160	703233	1	NUT, 1/4-20, GR5
0165	15X143MA	1	NUT,25-20 HEX FLG CTR
0170	707785	1	KNOB
0180	84007065	1	CONTROL BRACKET
0190	1758240AYP	2	BRACKET, Fender
0200	1757796CYP	1	BRACKET, Brand Plate
0210	84007066	1	PLATE, Seat Pivot
0225	84004627	7	CAPSCREW
0310	84007067	1	WELDMENT, Pivoting Axle
0320	84006896	2	WELDMENT, Caster
0330	703993	2	RETAINER, EXT RING, 1
0340	703199	2	WASHER, 1
0350	1758354YP	4	BEARING
0360	5105524YP	2	CAP
0370	84006909	1	BRACKET, Fascia, Rear
0380	703800	2	BOLT, CRRG, 5/16-18X1
0500	707789	1	BOLT
0510	1960035SM	2	WASHER-0.625(0.64IDX1
0520	1759234YP	2	BUSHING
0530	84003031	1	NUT
0540	703589	2	CAPSCREW, 3/8-16X2
0550	5025156SM	2	WASHER, Flat, 3/8
0570	1755279YP	2	SHOCK ABSORBER, 8IN
0580	5025165SM	6	WASHER, 3/8" FENDER
0590	84007037	2	BOLT
0600	1759391YP	2	PAD-FRICTION
0610	5025594YP	4	SCREW, 5/16-18 X 1
0620	703902	4	NUT, HEX, 5/16-18
0630	1667812SM	2	SPACER

Not For Reproduction

Copyright © Briggs & Stratton. All Rights reserved

Lift Group

Note: Unless noted otherwise, use the standard torque specifications

Mfg. No: 2691814-01

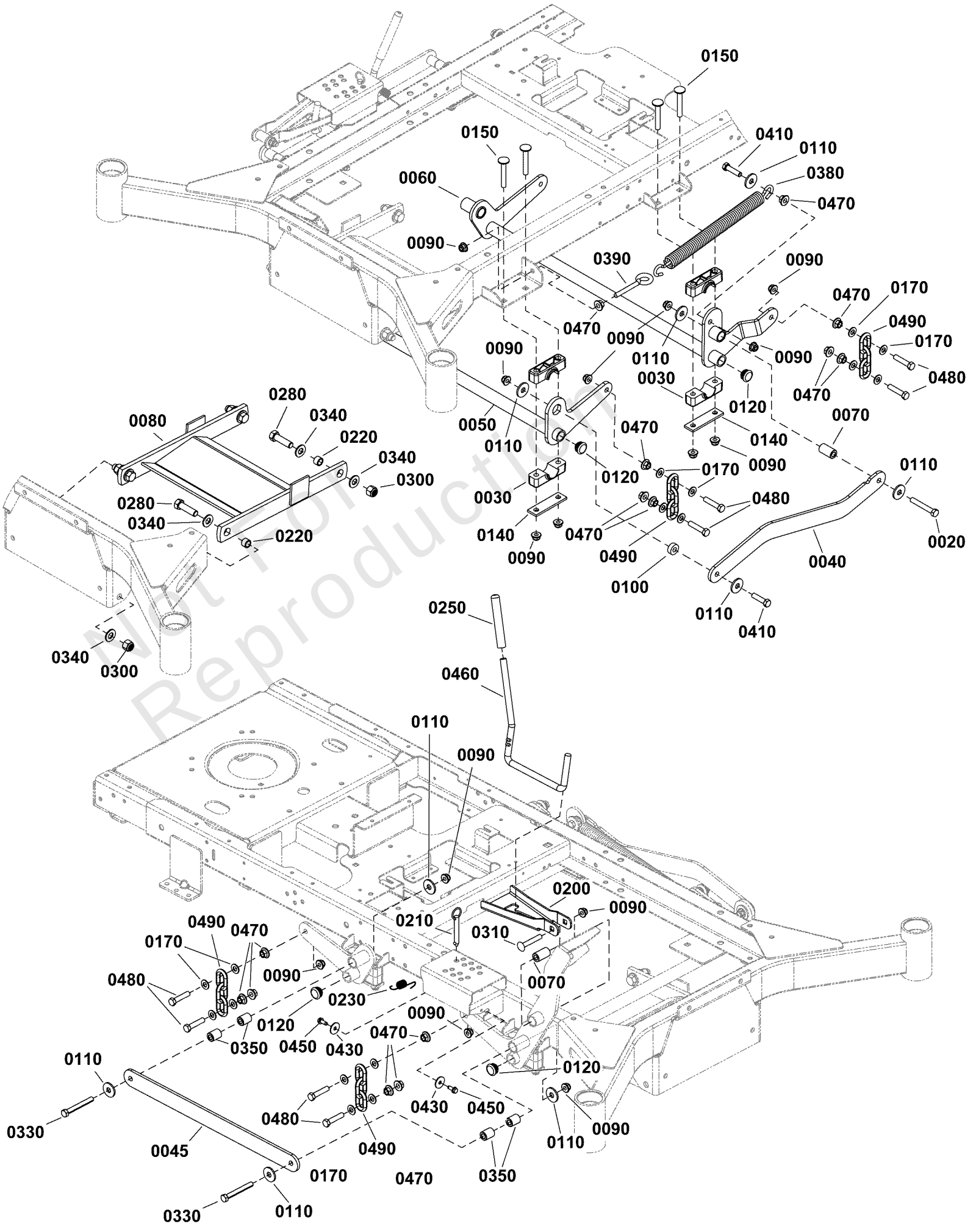

Not For Reproduction

Lift Group

REF NO	PART NO	QTY	DESCRIPTION
0020	5025013X20SM	1	BOLT, 3/8-16 X 2-1/2"
0030	5100634SM	8	PIVOT BLOCK, PLASTIC
0040	84006925	1	LINKAGE
0045	84006926	1	LINKAGE, Lift Assist, RH
0050	84006914	1	LIFTER
0060	84006915	1	SHAFT ASSEMBLY
0070	1756612YP	2	BUSHING, DIFF. LOCK
0080	84006928	1	BAR, PULLER
0090	5025394SM	19	NUT, 3/8-16 HEX NYLOCK
0100	1667811SM	1	SPACER
0110	1919384SM	9	WASHER-0.375(0.44IDX1
0120	84007739	4	PLUG
0140	5403925AYP	4	PLATE, Pivot
0150	1960615SM	8	BOLT-RD HD SQ NK 3/8
0170	5025156SM	16	WASHER, Flat, 3/8
0200	1758284AYP	1	BRACKET
0210	5103021YP	1	HITCH PIN, 3/8 X 2-1/
0220	5020870SM	4	INSERT, BEARING
0230	1758283YP	1	SPRING, EXTENSION
0250	5021880SM	1	GRIP, FOAM
0280	5025018X14SM	4	BOLT, 1/2-20 X 1-3/4" GD5 YZ
0300	5025098SM	4	NUT, 1/2-20 HEX NYLON
0310	7900009SM	1	RHSSNB, 3/8-16 X 2-1/
0330	5025013X24SM	2	BOLT, 3/8-16 X 3" GD5
0340	5025158SM	8	WASHER, 1/2" SAE
0350	1733068SM	4	SPACER-0.390IDX0.750O
0380	5023355SM	1	SPRING, DECK LIFT ASS
0390	5025429SM	1	EYEBOLT - 3/8-16
0410	703406	2	CAPSCREW,3/8-16X1.5
0430	5025288YP	2	WASHER, 1/4 FENDER
0450	703054	2	SCREW, 1/4-20X0.625
0460	5105717YP	1	ROD
0470	5025128SM	14	NUT, 3/8-16 HEX SERRA
0480	5025013X14SM	8	BOLT, 3/8-16 X 1-3/4"
0490	5050878X3SM	4	CHAIN, 5/16" GD30, 3

Not For Reproduction

Copyright © Briggs & Stratton. All Rights reserved

Parking Brake Group

Note: Unless noted otherwise, use the standard torque specifications

Mfg. No: 2691814-01

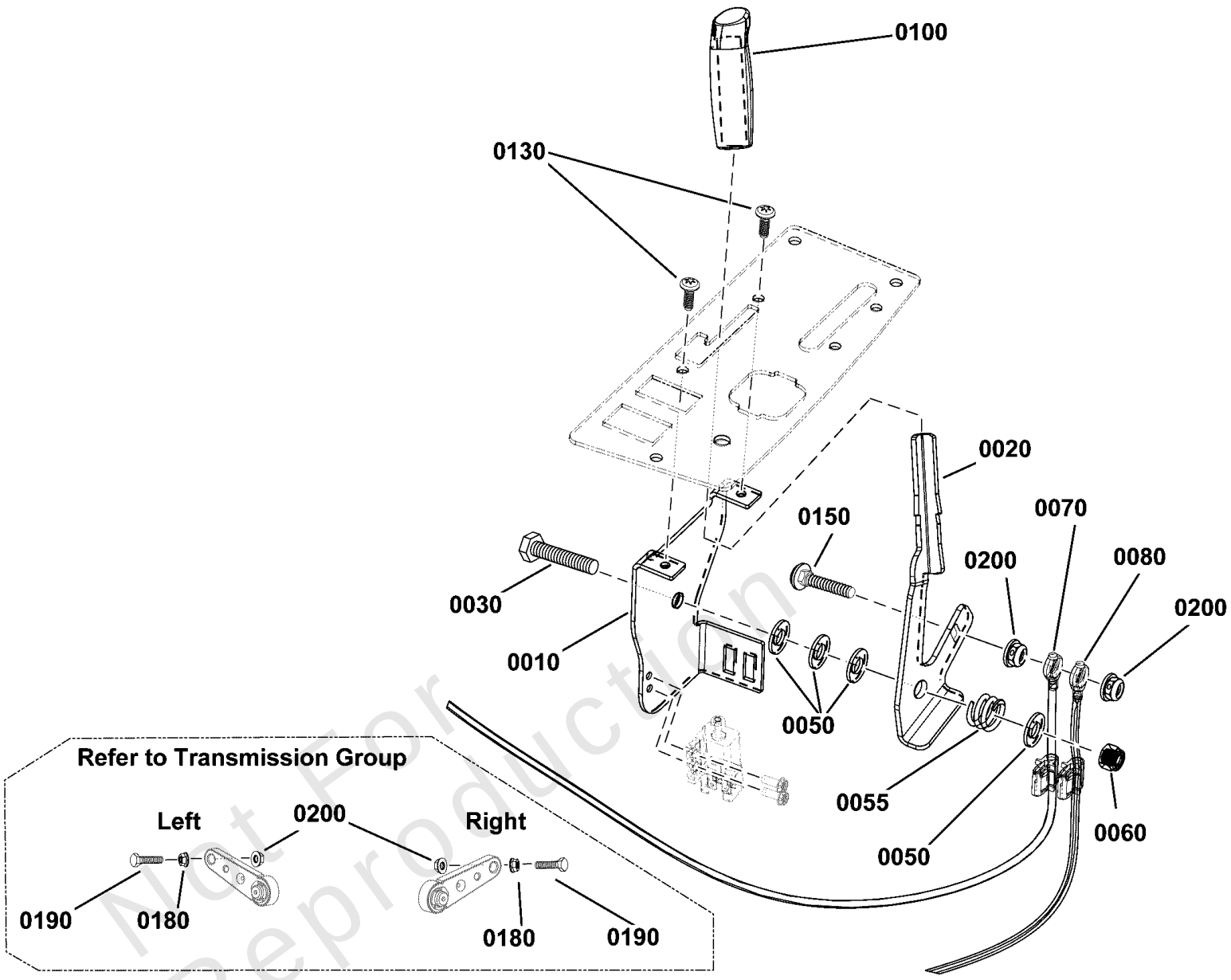

Not For Reproduction

Copyright © Briggs & Stratton. All Rights reserved

Parking Brake Group

REF NO	PART NO	QTY	DESCRIPTION
0010	84006916	1	BRACKET
0020	84006917	1	LEVER
0030	703589	1	CAPSCREW, 3/8-16X2
0050	703878	1	WASHER, FLAT
0055	7028036YP	4	SPRING
0060	5025096SM	1	NUT, 3/8-16 HEX NYLON
0070	84006918	1	CABLE, BRAKE
0080	84006919	1	CABLE, BRAKE
0100	84001706	1	GRIP
0130	7090999SM	2	SCREW, Phillips Head, 1/4-20 X 5/8
0140	703586	2	TIE, SELF LOCKING -(Not Illustrated)
0150	703175	3	BOLT,RD SH SQ
0180	5025127SM	1	NUT, 5/16-18 HEX SERR
0190	5025011X12SM	2	BOLT, 5/16-18 X 1-1/2
0200	5025392SM	2	NUT, Ny Lock Flange, 5/16-18

Not For Reproduction

Copyright © Briggs & Stratton. All Rights reserved

Seat Group

Note: Unless noted otherwise, use the standard torque specifications

Mfg. No: 2691814-01

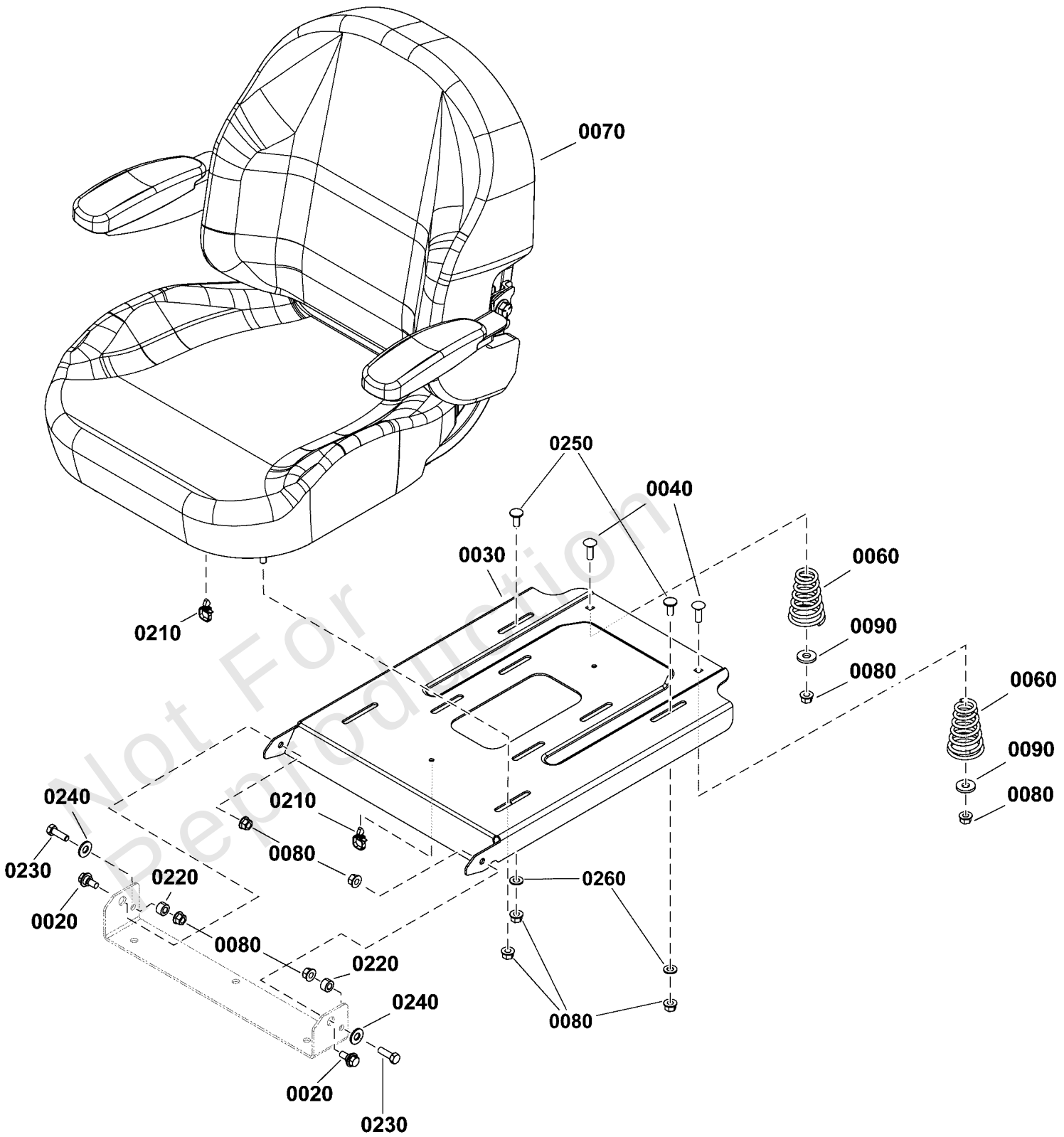

Not For Reproduction

Copyright © Briggs & Stratton. All Rights reserved

Seat Group

REF NO	PART NO	QTY	DESCRIPTION
0020	1752802YP	2	BOLT, SHLDR, 5/16-18
0030	1760194CYP	1	SLIDE, Seat
0040	703483	2	BOLT,5/16-18X1.000,RO
0060	1717051SM	2	SPRING, Seat
0070	84006922	1	SEAT, Simplicity
0070-10	84006999	1	COVER, Cushion, Simplicity
0070-20	84007001	1	COVER, Back, Simplicity
0080	5025392SM	10	NUT, Ny Lock Flange, 5/16-18
0090	704128	2	WASHER
0210	708733	2	TIE, Cable 1/4
0220	5103767YP	2	SPACER, .33X.625X.360
0230	5025011X8SM	2	CAPSCREW, Hex Head, 5/16-18 X 1
0240	703878	2	WASHER, FLAT
0250	703350	2	WASHER
0260	703185	2	BOLT, Round Head, Short Square Neck

Not For Reproduction

Copyright © Briggs & Stratton. All Rights reserved

Suspension Group

Note: Unless noted otherwise, use the standard torque specifications

Mfg. No: 2691814-01

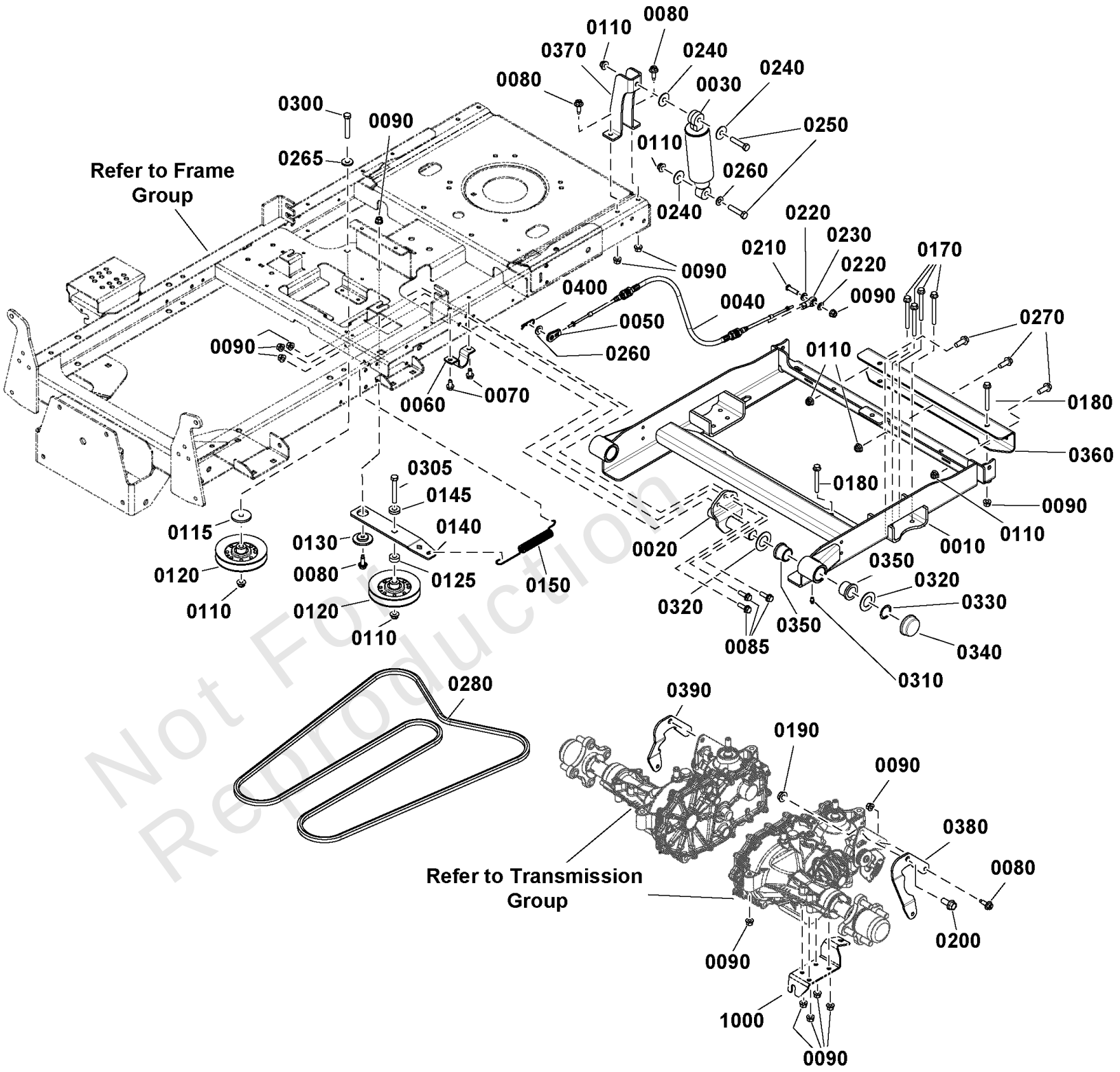

Not For Reproduction

Suspension Group

REF NO	PART NO	QTY	DESCRIPTION
0010	84007071	1	CARRIER, Transmission
0020	1758716CYP	2	SWING ARM, Rear
0030	1758705YP	2	SHOCK ABSORBER, 10.5"
0040	1759206YP	2	CABLE, Push/Pull
0050	1759413YP	2	END-CABLE
0060	1720147BZYP	2	STRAP, 1 IN. DIA
0070	703949	4	SCREW, 5/16-18.625
0080	1960667SM	7	SCREW-HEX WZ LOCK FLN
0085	703410	6	BOLT,5/16-18X1
0090	5025392SM	27	NUT, Ny Lock Flange, 5/16-18
0110	5025394SM	9	NUT, 3/8-16 HEX NYLOCK
0115	706128	1	SPACER, IDLER
0120	1759212YP	2	PULLEY
0125	1667811SM	1	SPACER
0130	1727935SM	1	SPACER-PIVOT 0.330ID
0140	1761878AYP	1	ARM, IDLER
0145	5044960SM	1	SPACER, .39 X 1.00 X
0150	1758045YP	1	SPRING-EXTENSION
0170	707943	8	SCREW
0180	770083	4	SCREW
0190	1930650SM	2	NUT-HEX FLANGE 7/16-1
0200	1960043SM	2	SCREW-HEX WZ LOCK FLN
0210	703172	2	SCREW
0220	5025155SM	4	WASHER, 5/16
0230	5101801YP	2	JOINT-BALL
0240	5025165SM	6	WASHER, 3/8" FENDER
0250	5025013X14SM	4	BOLT, 3/8-16 X 1-3/4"
0260	5025156SM	4	WASHER, Flat, 3/8
0265	704128	1	WASHER
0270	704038	3	SCREW
0280	84006991	1	V-BELT
0300	5025013X18SM	1	BOLT, 3/8-16 X 2-1/4"
0305	5025013X20	1	BOLT, 3/8-16 X 2-1/2" GD5 CZ
0310	1704314SM	2	LUBE FITTING, .250 DR
0320	703199	4	WASHER, 1
0330	703200	2	PUSHNUT
0340	094618MA	2	HUB CAP
0350	1758717YP	4	BUSHING
0360	1759163CYP	1	SUPPORT, Transmission
0370	1758778CYP	2	MOUNT, Rear Shock
0380	1759021AYP	1	ARM
0390	1759022AYP	1	ARM
0400	7091503SM	2	HAIR PIN, 3/32X1-1/2
1000	84006958	1	BRACKET

Not For Production Replacement

Footnotes:

Note:** Spring Rate 160lbs / 59.7kg +/- 10lbs / 3.7kg

Copyright © Briggs & Stratton. All Rights reserved

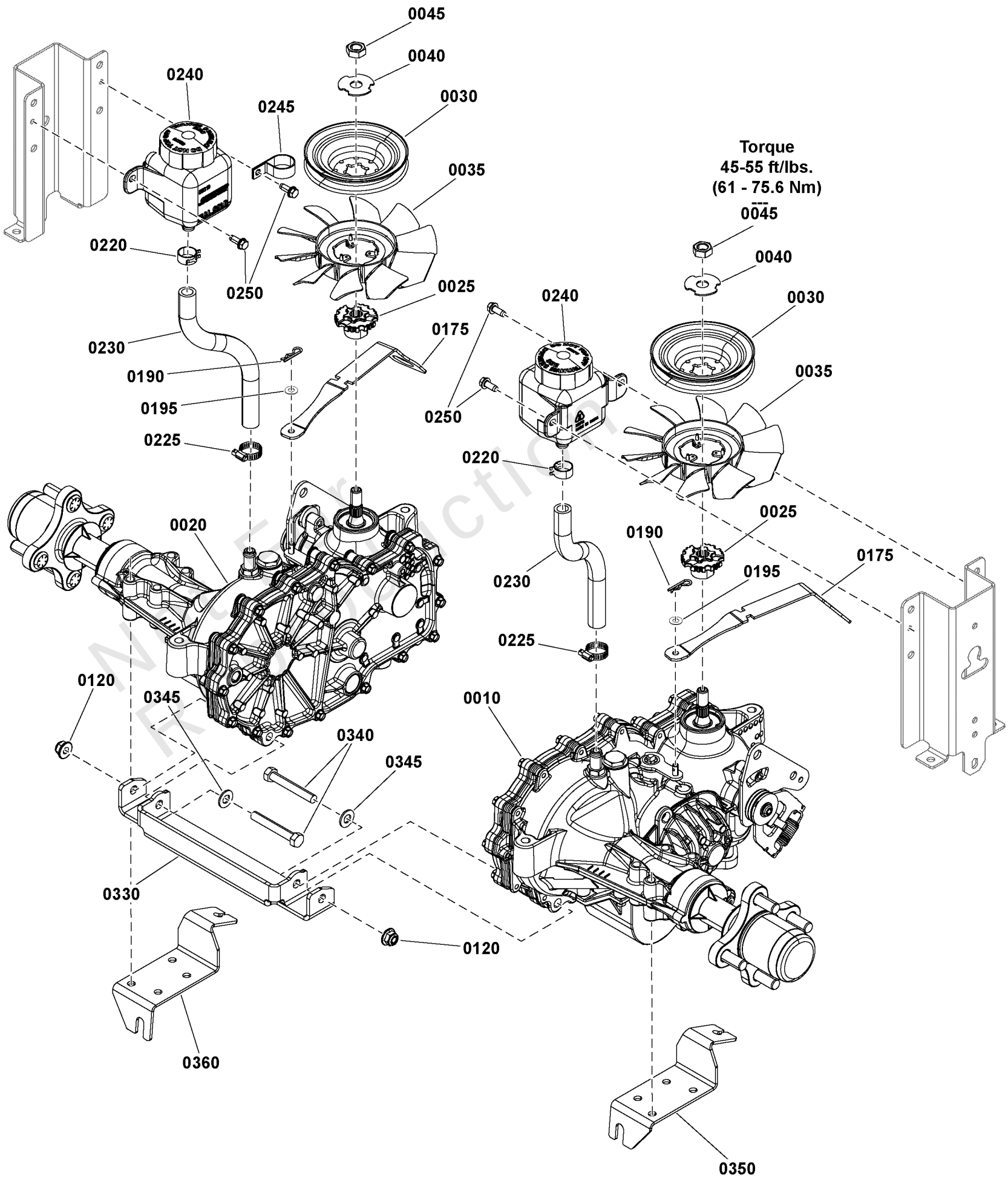

Copyright © Briggs & Stratton. All Rights reserved

Transmission Group - Suspension

REF NO	PART NO	QTY	DESCRIPTION
0010	84006911	1	TRANSMISSION
0020	84006910	1	TRANSMISSION
0025	84003847	2	HUB
0030	1759447YP	2	PULLEY, Transmission
0035	84007455	2	FAN
0040	5102914YP	2	WASHER, ZT5400, SLOTT
0045	5102916YP	2	NUT, ZT5400
0120	5025394SM	2	NUT, 3/8-16 HEX NYLOCK
0175	1759276AYP	2	VALVE-TOW
0190	703430	2	PIN, 13X1.19
0195	5025154	2	WASHER, 1/4 SAE
0220	5025474SM	2	CLAMP - HOSE
0225	5021392SM	2	CLAMP, #6 HOSE, STAIN
0230	5050857X105YP	2	HOSE,10.5 OIL DRAIN
0240	5100473SM	2	RESERVOIR
0245	5021500SM	1	CLAMP, VINYL INSULATED, 1.00
0250	703054	4	SCREW, 1/4-20X0.625
0330	1759172AYP	1	SUPPORT
0340	5025013X20	2	BOLT, 3/8-16 X 2-1/2" GD5 CZ
0345	5025156SM	2	WASHER, Flat, 3/8
0350	84006958	1	BRACKET
0360	84006959	1	BRACKET

Not For Reproduction

Copyright © Briggs & Stratton. All Rights reserved

Note: Unless noted otherwise, use the standard torque specifications

Mfg. No: 2691814-01

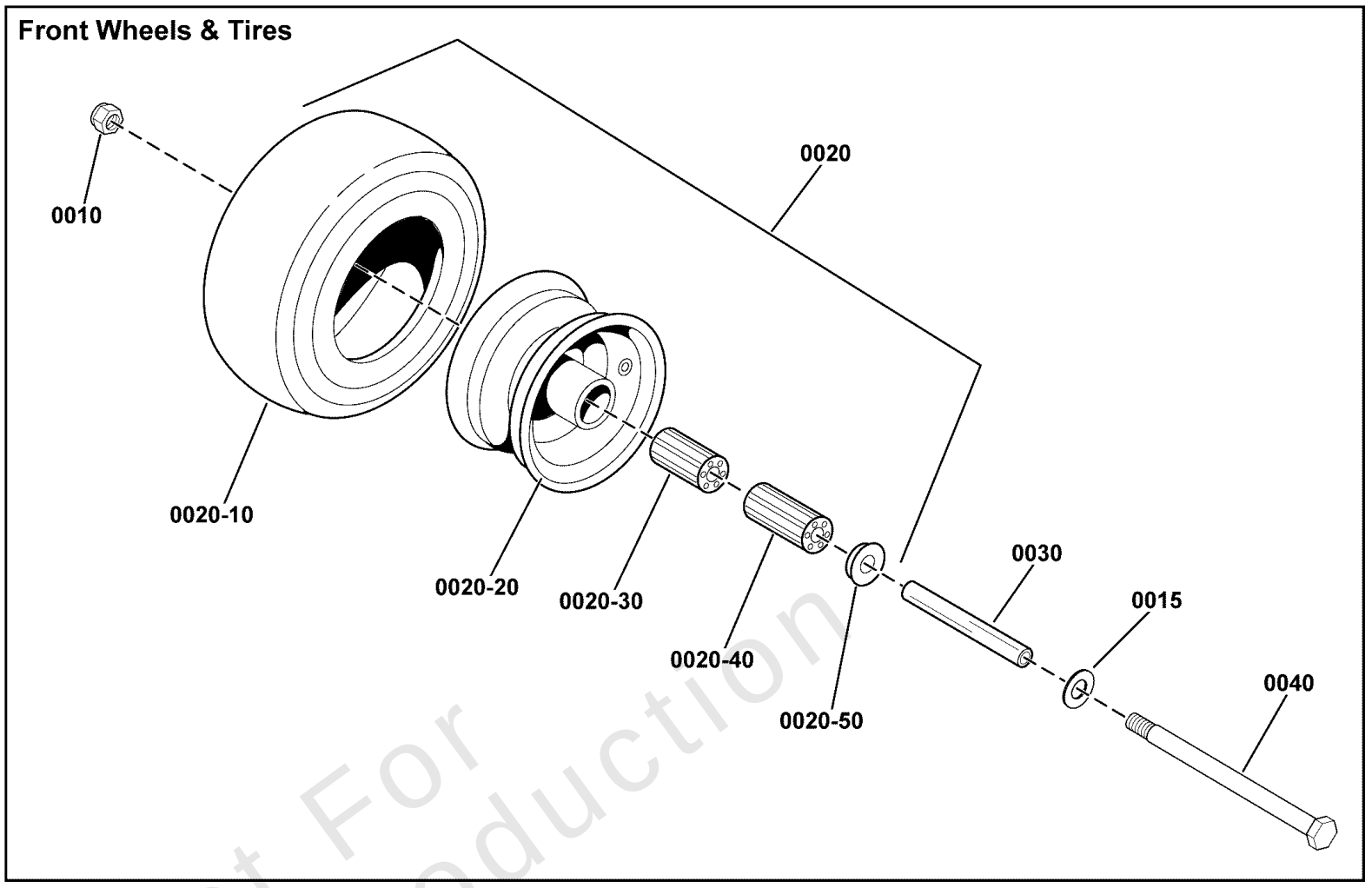

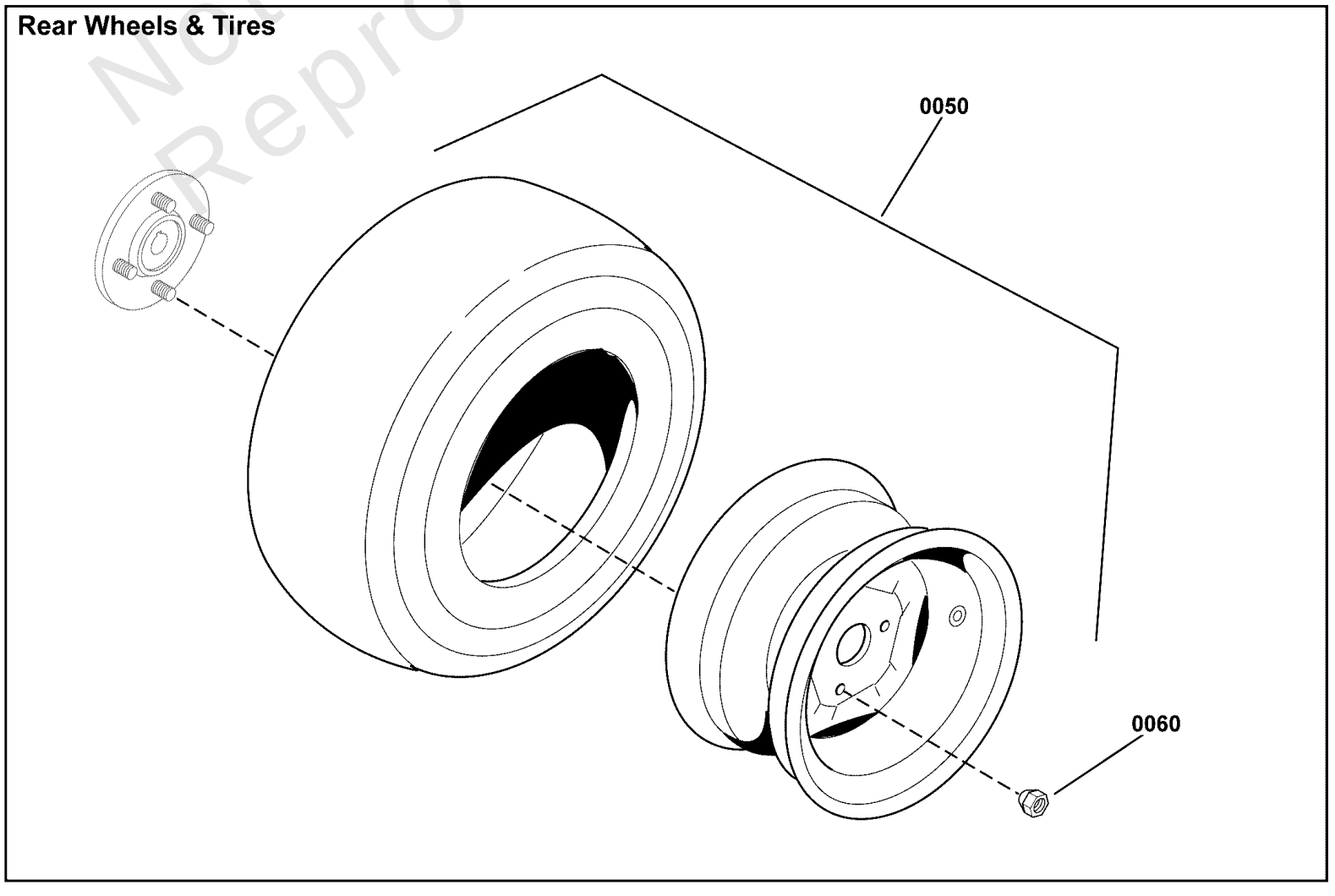

Not For Reproduction

Copyright © Briggs & Stratton. All Rights reserved

Wheel & Tire Group

REF NO	PART NO	QTY	DESCRIPTION
0010	5025396SM	2	NUT, Hex Flange, 1/2-13
0015	5025158SM	2	WASHER, 1/2" SAE
0020	84006934	2	WHEEL ASSEMBLY
0020-10	5022577YP	2	TIRE, Rubber Only
0020-20	-----	2	WHEEL, 6"" DIA X 4.5"" BEAD WIDTH, CASTER
0020-30	84002537	2	BEARING, OPEN GAGE ROLLER, 3/4" ID X 2.75"
0020-40	5021182SM	2	BEARING, Roller (1 per tire)
0020-50	5021043SM	2	RETAINER, Bearing
0030	84002029	2	CASTER AXLE SHAFT, .51"ID X .75"ODX 7.16
0040	5025017X72YP	2	BOLT, 1/2-13 X 9 GD5
0050	84006936	2	WHEEL ASSEMBLY, Rear, Grey
0060	5020601SM	8	NUT, 1/2-20, FOR WHEEL BOLT SILVER

Not For Reproduction

Copyright © Briggs & Stratton. All Rights reserved

Hardware Identification & Torque Specifications

Torque Specification Chart

FOR STANDARD METRIC MACHINE HARDWARE (Tolerance ± 20%)

Property Class	5.6 Class 5.6		8.8 Class 8.8		10.9 Class 10.9		12.9 Class 12.9	
Size Of Hardware	*in/lbs* **ft/lbs**	Nm.	*in/lbs* **ft/lbs**	Nm.	*in/lbs* **ft/lbs**	Nm.	*in/lbs* **ft/lbs**	Nm.
M3	*5.88*	*.56*	*13.44*	*1.28*	*19.2*	*1.80*	*22.92*	2.15
M4	*13.44*	*1.28*	*30.72*	*2.90*	*43.44*	*4.10*	*52.56*	4.95
M5	*26.4*	*2.50*	*60.96*	*5.75*	**5.97**	*8.10*	**7.15**	9.7
M6	*44.64*	*4.3*	**7.3**	*9.9*	**10.3**	*14*	**12.1**	16.5
M7	**5.2**	*7.1*	**12.1**	*16.5*	**16.9**	*23*	**19.9**	27
M8	**7.7**	*10.5*	**17.7**	*24*	**25**	*34*	**29**	40
M10	**15**	*21*	**35**	*48*	**50**	*67*	**59**	81
M12	**26**	*36*	**61**	*83*	**86.2**	*117*	**103**	140
M14	**42**	*58*	**101**	*132*	**136**	*185*	**162**	220
M16	**64**	*88*	**147**	*200*	**210**	*285*	**250**	340
M18	**89**	*121*	**202**	*275*	**287**	*390*	**346**	470
M20	**126**	*171*	**290**	*390*	**405**	*550*	**486**	660
M22	**169**	*230*	**390**	*530*	**559**	*745*	**656**	890
M24	**217**	*295*	**497**	*375*	**708**	*960*	**840**	1140
M27	**320**	*435*	**733**	*995*	**1032**	*1400*	**1239**	1680
M30	**435**	*590*	**995**	*1350*	**1401**	*1900*	**1681**	2280
M33	**590**	*800*	**1349**	*1830*	**1902**	*2580*	**2278**	3090
M36	**759**	*1030*	**1740**	*2360*	**2441**	*3310*	**2935**	3980
M39	**988**	*1340*	**2249**	*3050*	**3163**	*4290*	**3798**	5150

The guides and ruler furnished below are designed to help you select the appropriate hardware.

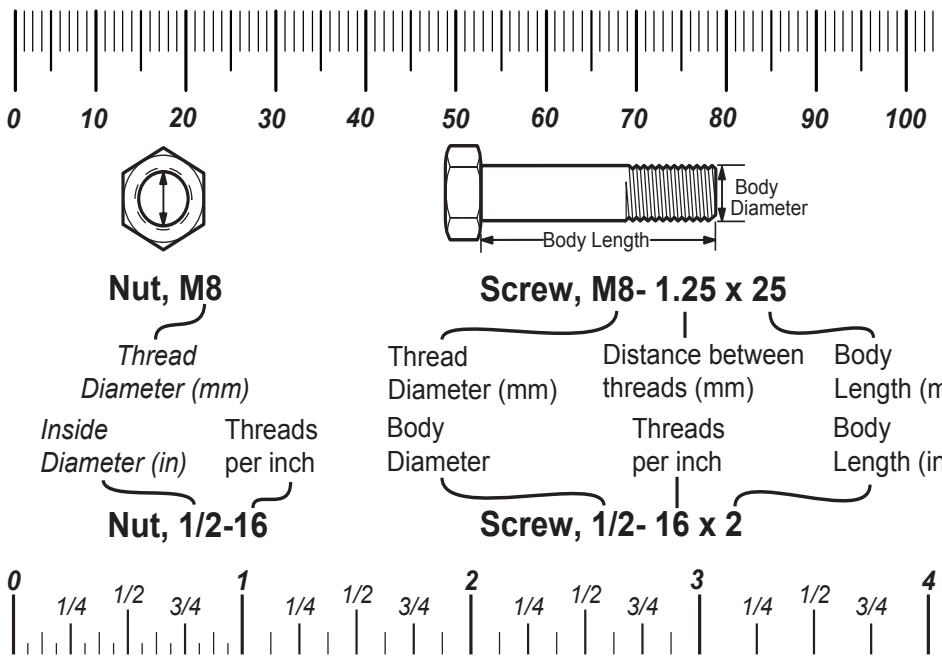

Standard Hardware Sizing

When a washer or nut is identified as **1/2"** (M8), this is the *Nominal size*, meaning the *inside diameter* is 1/2 inch (8mm metric thread diameter); if a second number is present it represents the *threads per inch* (distance between threads).

When bolt or capscrew is identified as **1/2 - 16 x 2"** (M8 - 1.25 x 50), this means the *Nominal size*, or body diameter is 1/2 inch (8mm metric thread diameter), the second number,16, represents the *threads per inch, (distance between threads).* The final number is the body length of the bolt or screw, 2 inches (50mm).

Torque Specification Chart

FOR STANDARD MACHINE HARDWARE (Tolerance ± 20%)

Hardware Grade	No Marks SAE Grade 2		SAE Grade 5		SAE Grade 8	
Size Of Hardware	*in/lbs* **ft/lbs**	Nm.	*in/lbs* **ft/lbs**	Nm.	*in/lbs* **ft/lbs**	Nm.
8-32	*19*	2.1	*30*	3.4	*41*	4.6
8-36	*20*	2.3	*31*	3.5	*43*	4.9
10-24	*27*	3.1	*43*	4.9	*60*	6.8
10-32	*31*	3.5	*49*	5.5	*68*	7.7
1/4-20	*66*	7.6	**8**	10.9	**12**	16.3
1/4-28	*76*	8.6	**10**	13.6	**14**	19.0
5/16-18	**11**	15.0	**17**	23.1	**25**	34.0
5/16-24	**12**	16.3	**19**	25.8	**29**	34.0
3/8-16	**20**	27.2	**30**	40.8	**45**	61.2
3/8-24	**23**	31.3	**35**	47.6	**50**	68.0
7/16-14	**30**	40.8	**50**	68.0	**70**	95.2
7/16-20	**35**	47.6	**55**	74.8	**80**	108.8
1/2-13	**50**	68.0	**75**	102.0	**110**	149.6
1/2-20	**55**	74.8	**90**	122.4	**120**	163.2
9/16-12	**65**	88.4	**110**	149.6	**150**	204.0
9/16-18	**75**	102.0	**120**	163.2	**170**	231.2
5/8-11	**90**	122.4	**150**	204.0	**220**	299.2
5/8-18	**100**	136	**180**	244.8	**240**	326.4
3/4-10	**160**	217.6	**260**	353.6	**386**	525.0
3/4-16	**180**	244.8	**300**	408.0	**420**	571.2
7/8-9	**140**	190.4	**400**	544.0	**600**	816.0
7/8-14	**155**	210.8	**440**	598.4	**660**	897.6
1-8	**220**	299.2	**580**	788.8	**900**	1,244.0
1-12	**240**	326.4	**640**	870.4	**1,000**	1,360.0

NOTES

1. These torque values are to be used for all hardware excluding: locknuts, self-tapping screws, thread forming screws, sheet metal screws and socket head setscrews.
2. Recommended seating torque values for locknuts:
   a. for prevailing torque locknuts - use 65% of grade 5 torques.
   b. for flange whizlock nuts and screws - use 135% of grade 5 torques.
3. Unless otherwise noted on assembly drawings, all torque values must meet this specification.

Common Hardware Types

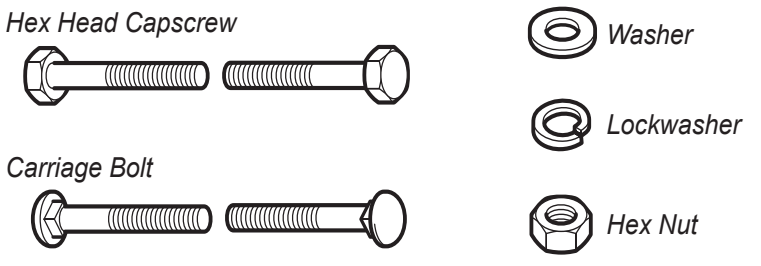

Wrench & Fastener Size Guide

1/4" Bolt or Nut Wrench—7/16"

5/16" Bolt or Nut Wrench—1/2"

3/8" Bolt or Nut Wrench—9/16"

7/16" Bolt or Nut Wrench (Bolt)—5/8" Wrench (Nut)—11/16"

1/2" Bolt or Nut Wrench—3/4"

M6 Bolt or Nut Wrench—10mm

M8 Bolt or Nut Wrench—13mm

M10 Bolt or Nut Wrench—17mm

M12 Bolt or Nut Wrench—19mm

M14 Bolt or Nut Wrench—22 mm

Copyright © Briggs & Stratton. All Rights reserved

19-Apr-2024