Parts Manual

Mfg. No: 1697144-00

1022ER, 9.5 Gross TP 22" Single Stage
Remote Chute Snowthrower

Copyright © Briggs & Stratton. All Rights reserved

Model Components — Page

Auger Drive Group 4
Auger Group 6
Chute Rotation Group 8
Decals Group 10
Engine Group 12
Frame Group 14
Handles & Controls Group 16
Wheel & Body Covering Group 18
Torque Specification Chart 20

Not For Reproduction

Copyright © Briggs & Stratton. All Rights reserved

Auger Drive Group

Note: Unless noted otherwise, use the standard torque specifications

Mfg. No: 1697144-00

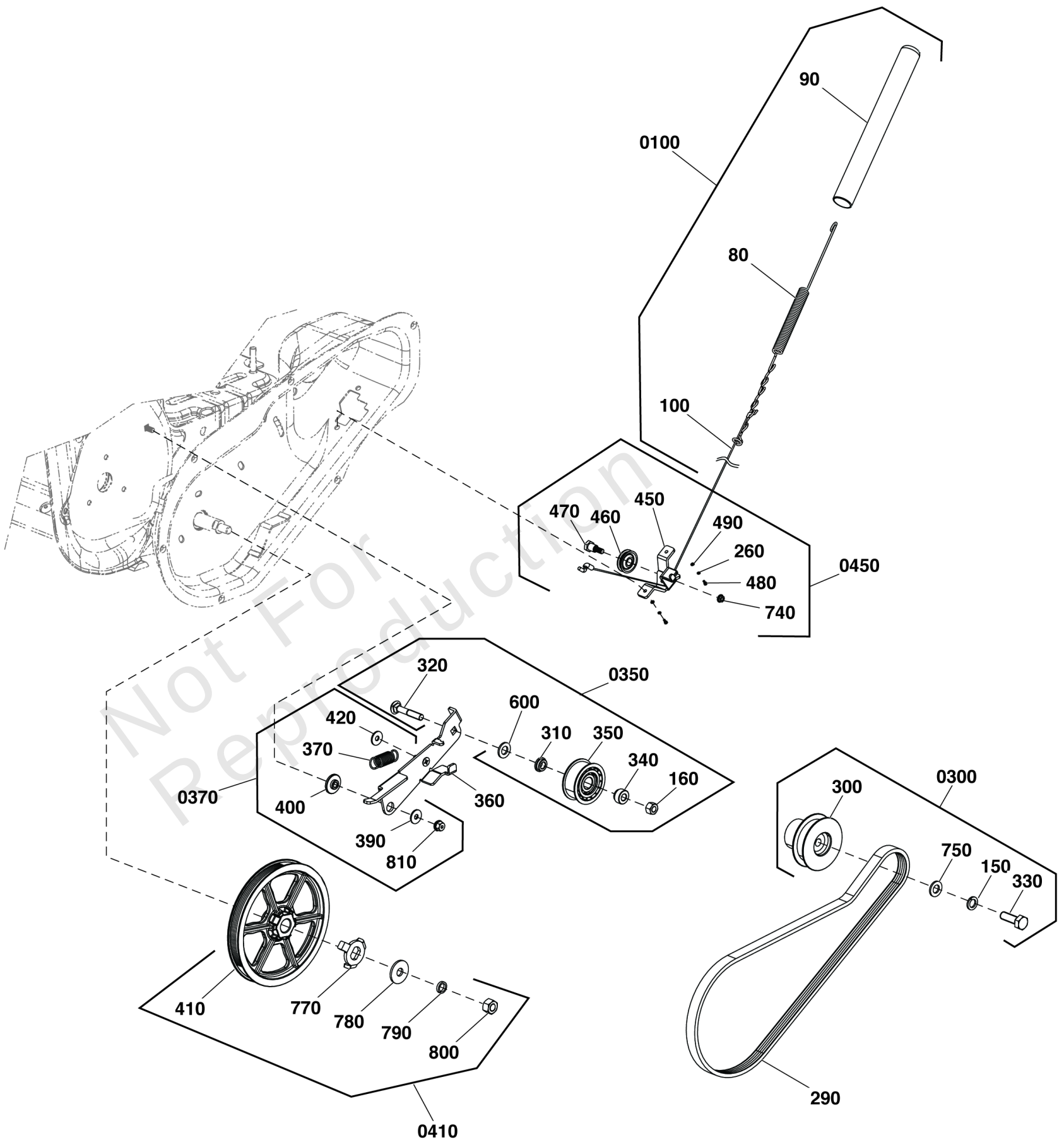

Not For Reproduction

Auger Drive Group

REF NO	PART NO	QTY	DESCRIPTION
290	709868	1	BELT, Drive
360	709927	1	PLATE, Tension
0100	709870	1	KIT, AUGER CABLE -(Incl. Ref. Nos. 80, 90, 100)
80	-----	1	SPRING, Cable
90	-----	1	SLEEVE, Rubber
100	-----	1	CABLE, Auger
0300	709876	1	KIT, ENGINE PULLEY -(Incl. Ref. Nos. 150, 300, 330, 750)
150	-----	1	WASHER, M10, Split Lock
300	-----	1	PULLEY, Driver
330	720016	1	SCREW, 3/8-24 x 1, Hex Head
750	-----	1	WASHER, 10x28x3, Flat
0350	709872	1	KIT, IDLER PULLEY, TENSION PLATE -(Incl. Ref. Nos. 160, 310, 320, 340, 350, 600)
160	-----	1	NUT, M8, Lock
310	-----	1	Spacer, 8.5 ID, 18 OD, 6 Thick, Shoulder
320	-----	1	BOLT, M8x40, Carriage
340	-----	1	SPACER, Idler Pulley
350	-----	1	PULLEY, 8 ID, 53 OD, 22 Wide, Idler
600	-----	1	WASHER, 10x20x1.8, Flat
0370	709874	1	KIT, HARDWARE, IDLER BRACKET -(Incl. Ref. Nos. 370, 390, 400, 420, 810)
370	709869	1	SPRING, Tension
390	-----	1	WASHER, 6 X 18 X 1.5, Flat
400	-----	1	SPACER, Idler Arm
420	-----	1	WASHER, 8x22x2, Flat
810	-----	1	* NUT, M6, Flange Head, Lock
0410	709875	1	KIT, AUGER PULLEY -(Incl. Ref. Nos. 410, 770, 780, 790, 800)
410	-----	1	PULLEY, Driven
770	-----	1	CLAW, Coupling
780	-----	1	WASHER, 10x25x2, Flat
790	-----	1	WASHER, M10, Split Lock
800	-----	1	NUT, Lock, M10
0450	709871	1	KIT, CABLE BASE, AUGER DRIVE -(Incl. Ref. Nos. 260, 450, 460, 470, 480, 490, 740)
260	-----	2	WASHER, M6, Split Lock, MC
450	-----	1	BRACKET, Cable Guide
460	-----	1	PULLEY, Cable
470	-----	1	SCREW, M6 X 12, Hex Head Shoulder
480	7091835	2	SCREW, M6 1.0X12MM, Hex Head, CZ
490	-----	2	WASHER, 6x12x.7, Flat
740	-----	1	NUT, M6, Flange Head

Not For Reproduction

Copyright © Briggs & Stratton. All Rights reserved

Auger Group

Note: Unless noted otherwise, use the standard torque specifications

Mfg. No: 1697144-00

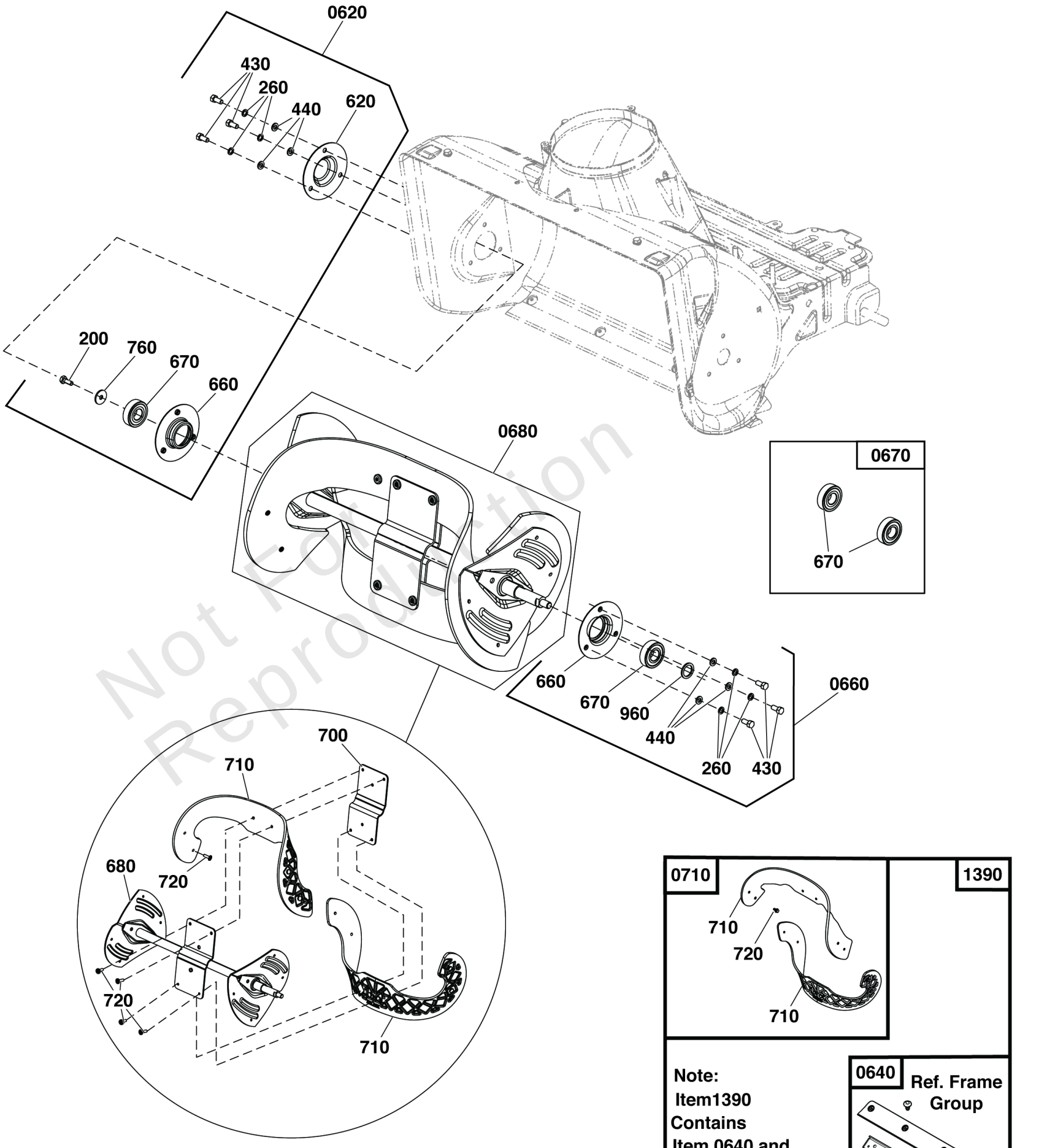

Not For Reproduction

Copyright © Briggs & Stratton. All Rights reserved

Auger Group

REF NO	PART NO	QTY	DESCRIPTION
0620	709882	1	KIT, AUGER BEARING, RIGHT -(Incl. Ref. Nos. 200, 260, 430, 440, 620, 660, 670, 760)
200	-----	1	BOLT, M6x16, Hex Head
260	-----	6	WASHER, M6, Split Lock, MC
430	7091835	6	SCREW, M6 1.0X12MM, Hex Head, CZ
440	-----	6	WASHER, 6x12x.7, Flat
620	-----	1	CAP, Bearing
660	-----	1	RETAINER, Bearing
670	-----	1	BEARING
760	-----	1	WASHER, 6x23x3, Flat
0640	770004	1	KIT-SCRAPER BAR -(Incl. Ref. Nos. 380, 630, 640, 650)
380	1752935	4	NUT, 1/4-20, Nylon Hex, CZ
630	5025299X5	4	SCREW, 1/4-20 x 5/8, Allen Head
640	-----	1	BAR, Scraper, Robolon
650	-----	1	SUPPORT, Scraper Blade
0660	709878	1	KIT, AUGER BEARING, LEFT -(Incl. Ref. Nos. 260, 430, 440, 660, 670, 960)
260	-----	3	WASHER, M6, Split Lock, MC
430	7091835	3	SCREW, M6 1.0X12MM, Hex Head, CZ
440	-----	3	WASHER, 6x12x.7, Flat
660	-----	1	RETAINER, Bearing
670	-----	1	BEARING
960	-----	1	WASHER, Flat, 18x24x2
0670	709877	1	KIT, AUGER BEARING -(Incl. Ref. No. 670)
670	-----	2	BEARING
0680	709881	1	KIT-AUGER ASSEMBLY -(Incl. Ref. Nos. 680, 700, 710, 720)
680	-----	1	SHAFT, Auger Assembly
700	-----	1	PLATE, Center
710	1739727	2	FLIGHT, Auger
720	7091246	12	SCREW, 1/4-20 x 3/4" Pan Head Self-Tap (Torx) BZ
0710	1687804	1	KIT, AUGER FLIGHT -(Incl. Ref. Nos. 710, 720)
710	1739727	2	FLIGHT, Auger
720	7091246	12	SCREW, 1/4-20 x 3/4" Pan Head Self-Tap (Torx) BZ
1390	709879	1	KIT, AUGER FLIGHT & SCRAPER BAR -(Incl. Ref. Nos. 380, 630, 640, 650, 710, 720)
380	1752935	4	NUT, 1/4-20, Nylon Hex, CZ
630	5025299X5	4	SCREW, 1/4-20 x 5/8, Allen Head
640	-----	1	BAR, Scraper, Robolon
650	-----	1	SUPPORT, Scraper Blade
710	1739727	2	FLIGHT, Auger
720	7091246	12	SCREW, 1/4-20 x 3/4" Pan Head Self-Tap (Torx) BZ

Not For Reproduction

Copyright © Briggs & Stratton. All Rights reserved

Chute Rotation Group

Note: Unless noted otherwise, use the standard torque specifications

Mfg. No: 1697144-00

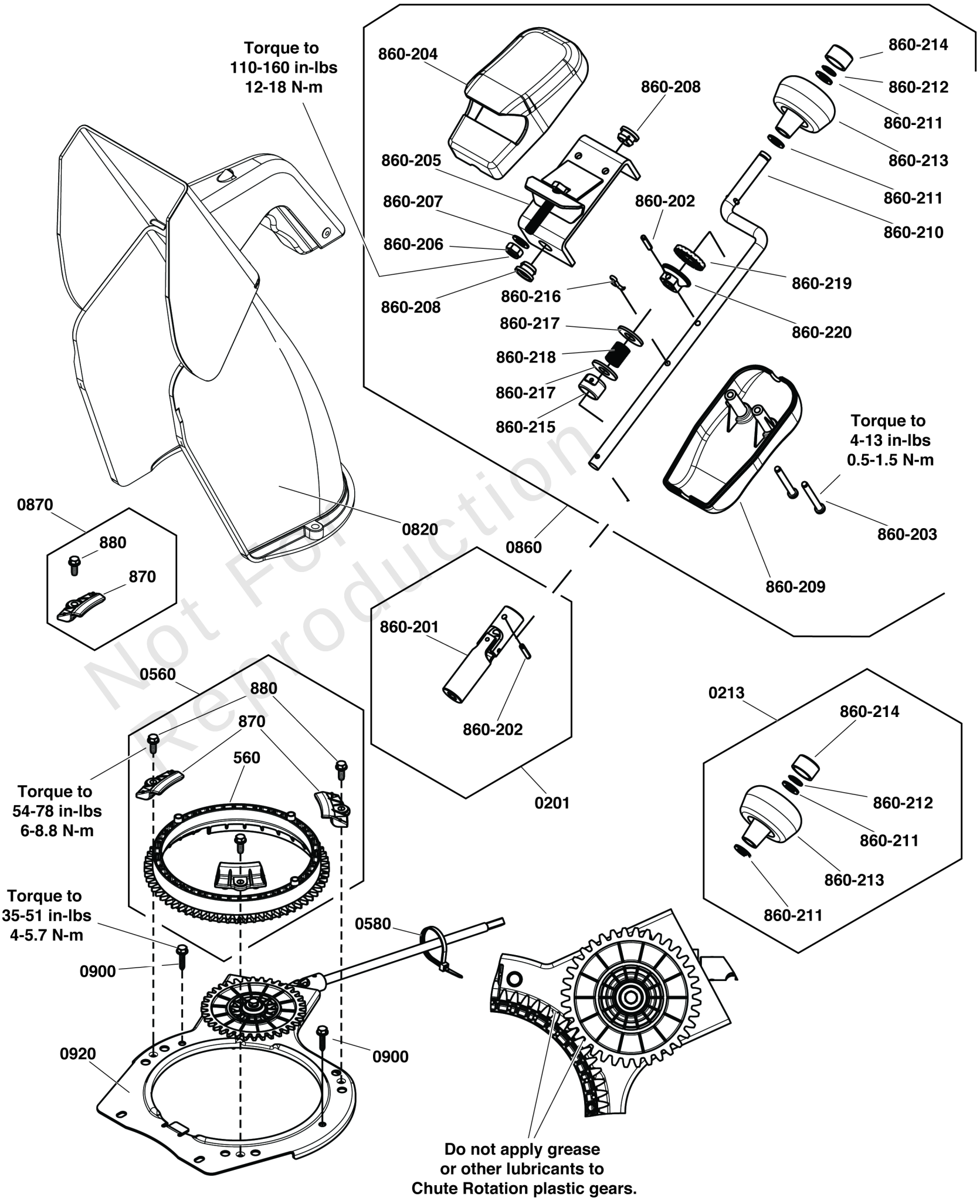

Not For Reproduction

Copyright © Briggs & Stratton. All Rights reserved

Chute Rotation Group

REF NO	PART NO	QTY	DESCRIPTION
0201	770635	1	UNIVERSAL JOINT -(Incl. Ref. Nos. 860-201 & 860-202)
860-201	-----	1	JOINT, Universal
860-202	-----	2	PIN, 4 X 20, Spring
0213	707502	1	KIT, Chute Knob -(Incl. Ref. Nos. 860-211, 860-212, 860-213 & 860-214)
860-211	-----	2	WASHER, 10x20x1, Flat
860-212	-----	1	RING, External Retaining, 10
860-213	-----	1	KNOB, Chute Rotator
860-214	-----	1	KNOB, Cover
0560	709922	1	KIT, CHUTE GEAR -(Incl. Ref. Nos. 560, 870 & 880)
560	-----	1	GEAR, 65T, 8P, Driven, SS Chute Rotation
870	-----	3	RETAINER, Chute
880	703054	3	SCREW, 1/4-20X0.625
0580	1740650MA	4	TIE, Cable, 7.4", Orange
0820	709756	1	CHUTE ASSEMBLY, Quick
0860	770633	1	REMOTE CHUTE ASSEMBLY, Handle -(Incl. Ref. Nos. 0860-203 Thru 0860-220)
860-203	-----	2	SCREW, 4.8x45, Phillips Head Self Tapping
860-204	-----	1	COVER, Top
860-205	-----	1	ASSEMBLY, Rotater Bracket
860-206	-----	1	NUT, M8, Lock
860-207	-----	1	WASHER, FLAT, 8X16X1.2
860-208	-----	2	RING, SJ Mounting Plate, Plastic
860-209	-----	1	COVER, Bottom
860-210	-----	1	LEVER, Rotator
860-211	-----	2	WASHER, 10x20x1, Flat
860-212	-----	1	RING, External Retaining, 10
860-213	-----	1	KNOB, Chute Rotator
860-214	-----	1	KNOB, Cover
860-215	-----	1	SLEEVE, Limit
860-216	-----	1	PIN, 2.5X16, Cotter
860-217	-----	2	WASHER, 10X25X2, Flat
860-218	-----	1	SPRING
860-219	-----	1	WASHER, Rubber, XX
860-220	-----	1	BUSHING, Remote
0870	772082	1	KIT, Chute Retainer -(Incl. Ref. Nos. 870 & 880)
870	-----	1	RETAINER, Chute
880	703054	1	SCREW, 1/4-20X0.625
0900	706516	2	SCREW, Hi-Low, 1/4-15 x 1
0920	770634	1	REMOTE CHUTE ASSEMBLY, Plate

Not For Reproduction

Copyright © Briggs & Stratton. All Rights reserved

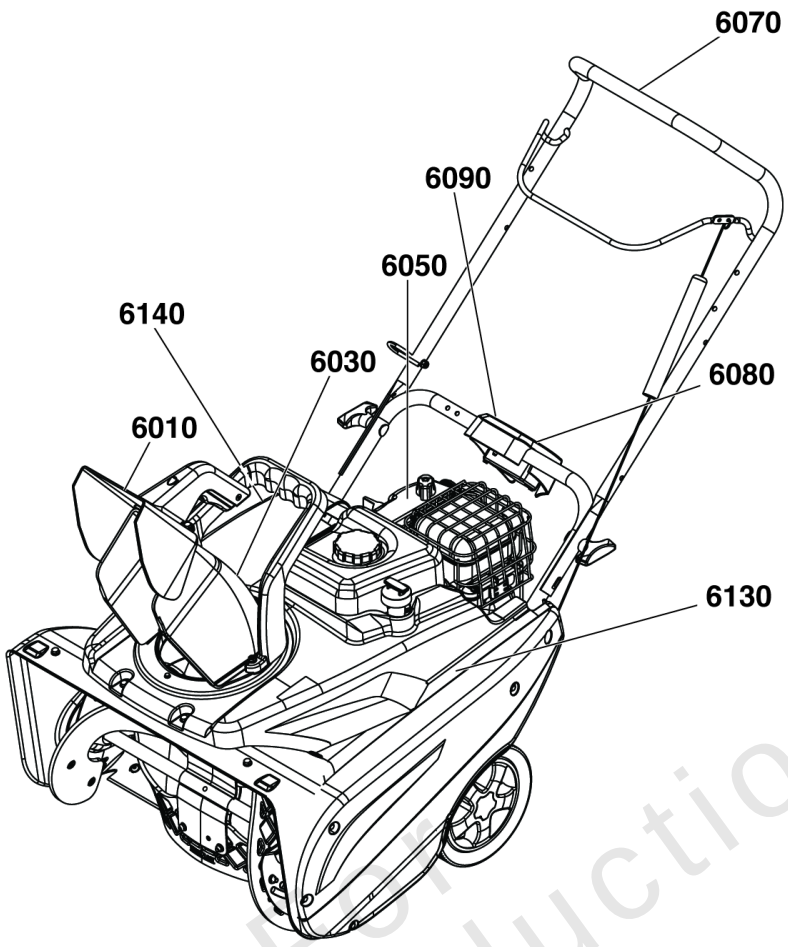

6010

6030

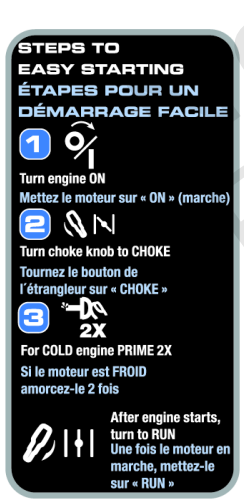

6050

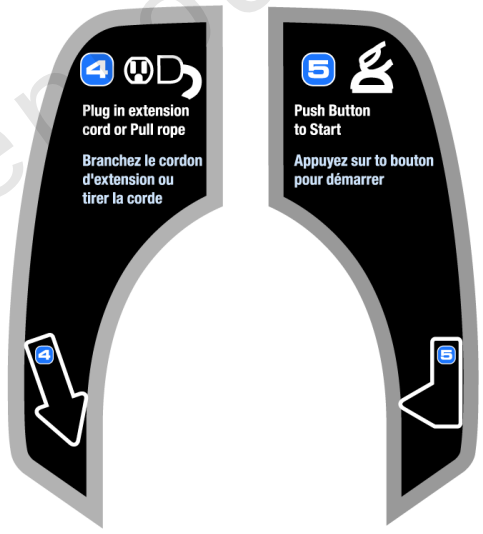

6080

6090

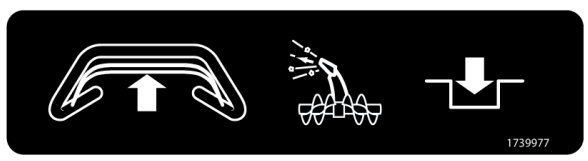

6070

Simplicity®

6130

1022ER

6140

Copyright © Briggs & Stratton. All Rights reserved

Decals Group

REF NO	PART NO	QTY	DESCRIPTION
6010	1737865YP	1	DECAL, Danger Chute Warning, FR/ENG
6030	1739966YP	1	DECAL, Chute, FR-EN
6050	1739970YP	1	DECAL, 1-2-3 Start, FR-EN
6070	1739977YP	1	DECAL, Bail Engagement
6080	1750734YP	1	DECAL, 4, START, FR-EN -(Electric Start)
6090	1750736YP	1	DECAL, 5, START, FR-EN -(Electric Start)
6130	1757674YP	1	DECAL, Simplicity
6140	772081	1	DECAL, Model, 1022ER -(Electric Start) (Remote Chute)

Not For Reproduction

Copyright © Briggs & Stratton. All Rights reserved

Note: Unless noted otherwise, use the standard torque specifications

Mfg. No: 1697144-00

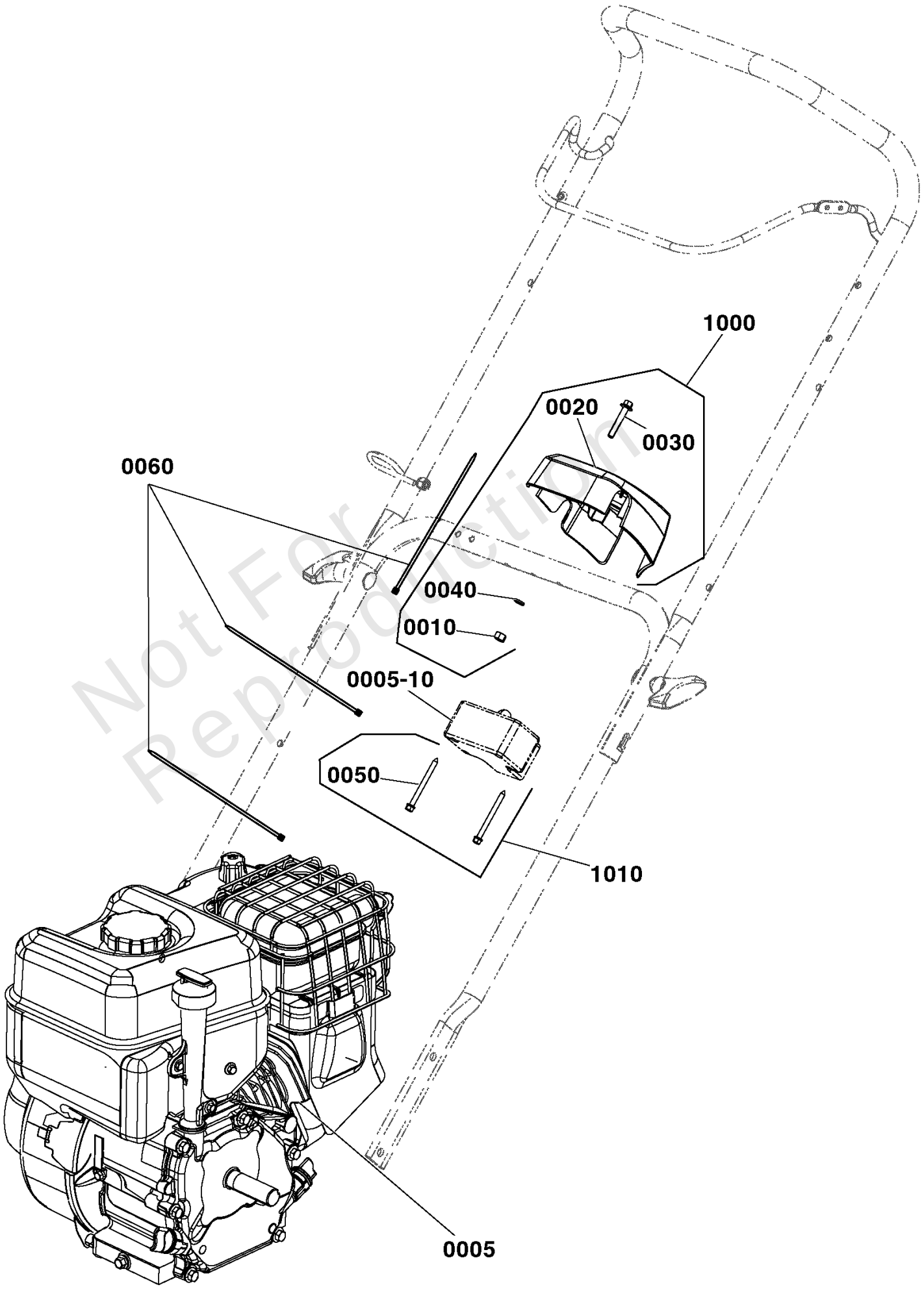

Not For Reproduction

Copyright © Briggs & Stratton. All Rights reserved

Engine Group

REF NO	PART NO	QTY	DESCRIPTION
0005	13A135-0002-F1	1	ENGINE, Briggs & Stratton, 9.5 GTP, Snow Series -(Engine Model: 13A135-0002-F1) (Refer to Note: *)
0005-10	591702	1	**MOTOR, Starter -(Refer to Note: **)
1000	709863	1	KIT, STARTER HOUSING -(Incl. Ref. Nos. 0010 through 0040) (For electric start only.)
0010	-----	2	NUT, M6, Lock
0020	1754873YP	1	HOUSING, Starter, 110V
0030	-----	1	SCREW, M6x40, Hex Flange Head
0040	-----	1	WASHER, 6x12x.7, Flat
1010	709864	1	KIT, HARDWARE, STARTER -(Incl. Ref. No. 0050) (For electric start only.)
0050	703066	2	SCREW, 8-16 x 2, Pan Head Phillips, Plast.

Not For Reproduction

Footnotes:

Note** See your local Briggs & Stratton distributor for parts and service.

Note* To verify your specific engine model, please reference the ID Tag located on your engine. See your local Briggs & Stratton distributor for parts and service.

Copyright © Briggs & Stratton. All Rights reserved

Frame Group

Note: Unless noted otherwise, use the standard torque specifications

Mfg. No: 1697144-00

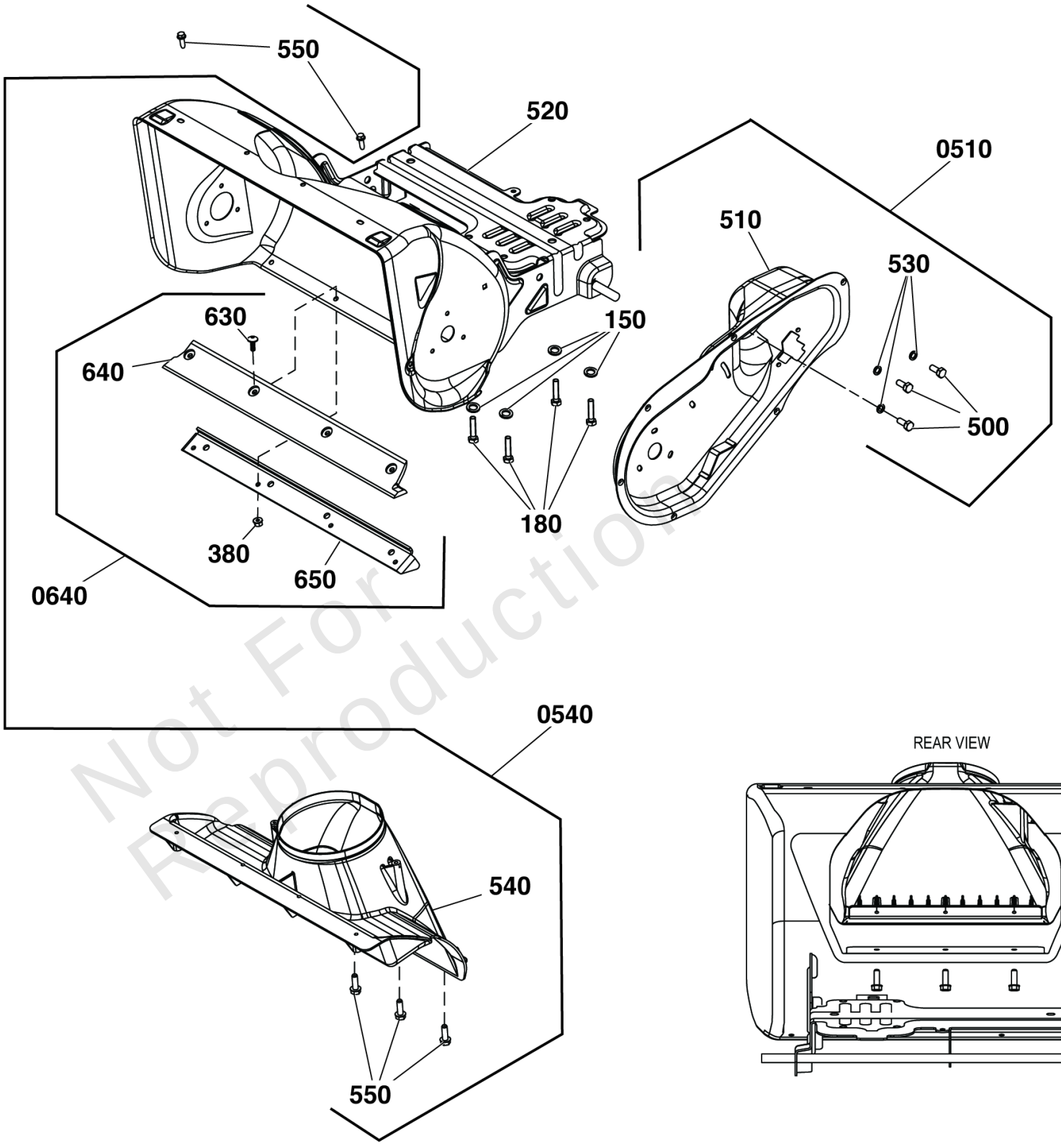

REAR VIEW

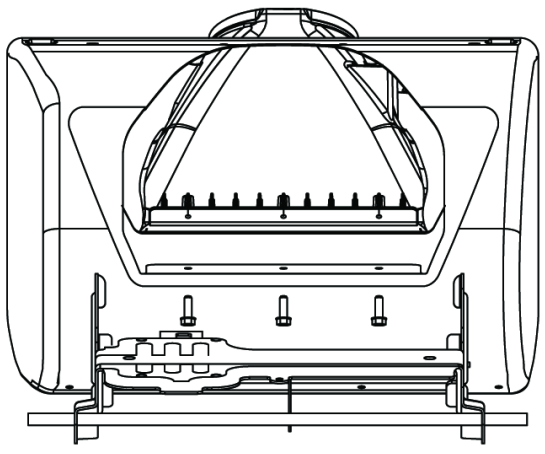

Not For Reproduction

Frame Group

REF NO	PART NO	QTY	DESCRIPTION
150	-----	4	WASHER, M10, Split Lock
180	75246GS	4	TAPTITE
520	-----	1	HOUSING, Auger
0510	709866	1	KIT, DRIVE HOUSING -(Incl. Ref. Nos. 500, 510, 530
500	1752876YP	3	CAPSCREW, Hex Head, 5/16-24 x 5/8
510	-----	1	HOUSING, Drive
530	703116	3	LCKWSHR
0540	84004738	1	KIT, CHIMNEY -(Incl. Ref. Nos. 540, 550)
540	-----	1	CHIMNEY
550	7091081SM	5	HWST, 1/4-15X3/4 BZ
0640	770004	1	KIT-SCRAPER BAR -(Incl. Ref. Nos. 380, 630, 640, 650)
380	1752935YP	4	NUT, 1/4-20, Nylon Hex, CZ
630	5025299X5YP	4	SCREW, 1/4-20 X 5/8
640	-----	1	BAR, Scraper, Robolon
650	1752660AYP	1	SUPPORT, Scraper Blade

Not For Reproduction

Copyright © Briggs & Stratton. All Rights reserved

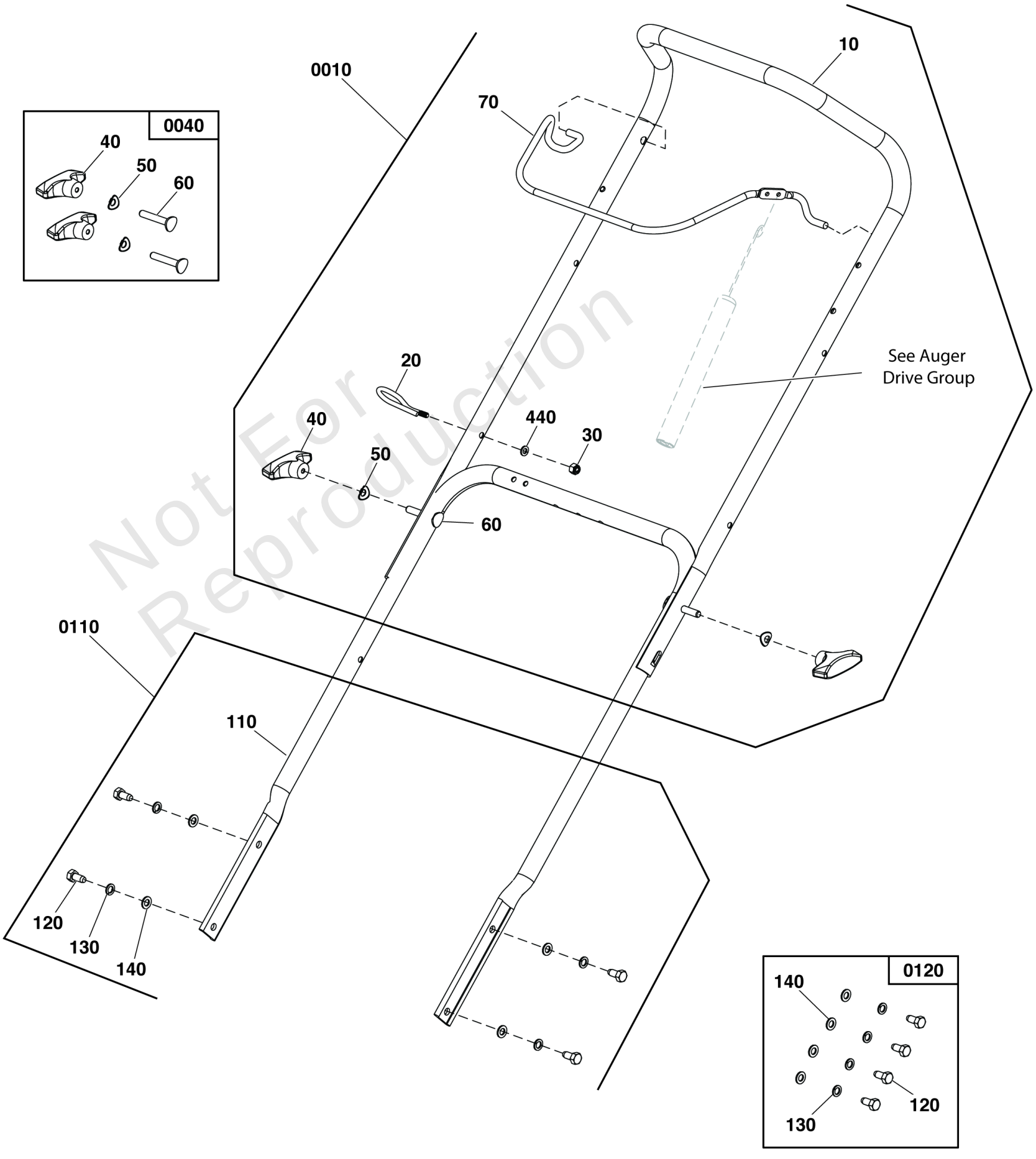

Not For Reproduction

Handles & Controls Group

REF NO	PART NO	QTY	DESCRIPTION
0010	709860	1	KIT, UPPER HANDLE -(Incl. Ref. Nos. 10, 20, 30, 40, 50, 60, 70, 440)
10	-----	1	HANDLEBAR, Upper SS
20	84002745	1	GUIDE, ROPE
30	-----	1	NUT, M6, Lock
40	-----	2	KNOB, Wing, M8
50	-----	2	WASHER, M8, Curved
60	-----	2	BOLT, M8x40, Carriage, Curved Head
70	709858	1	BAIL, Engine Stop
440	-----	1	WASHER, 6x12x.7, Flat
0040	709859	2	KIT, UPPER HANDLE HARDWARE -(Incl. Ref. Nos. 40, 50, 60)
40	-----	2	KNOB, Wing, M8
50	-----	2	WASHER, M8, Curved
60	-----	2	BOLT, M8x40, Carriage, Curved Head
0110	709862	1	KIT, LOWER HANDLE -(Incl. Ref. Nos. 110, 120, 130, 140)
110	-----	1	HANDLE, Lower
120	703988	4	CAPSCREW M8-1.25X16
130	-----	4	WASHER, Lock, M8
140	-----	4	WASHER, Flat, 8 X 16 X 1.2
0120	709861	1	KIT, LOWER HANDLE HARDWARE -(Incl. Ref. Nos. 120, 130, 140)
120	703988	4	CAPSCREW M8-1.25X16
130	-----	4	WASHER, Lock, M8
140	-----	4	WASHER, Flat, 8 X 16 X 1.2

Not For Reproduction

Copyright © Briggs & Stratton. All Rights reserved

Wheel & Body Covering Group

Note: Unless noted otherwise, use the standard torque specifications

Mfg. No: 1697144-00

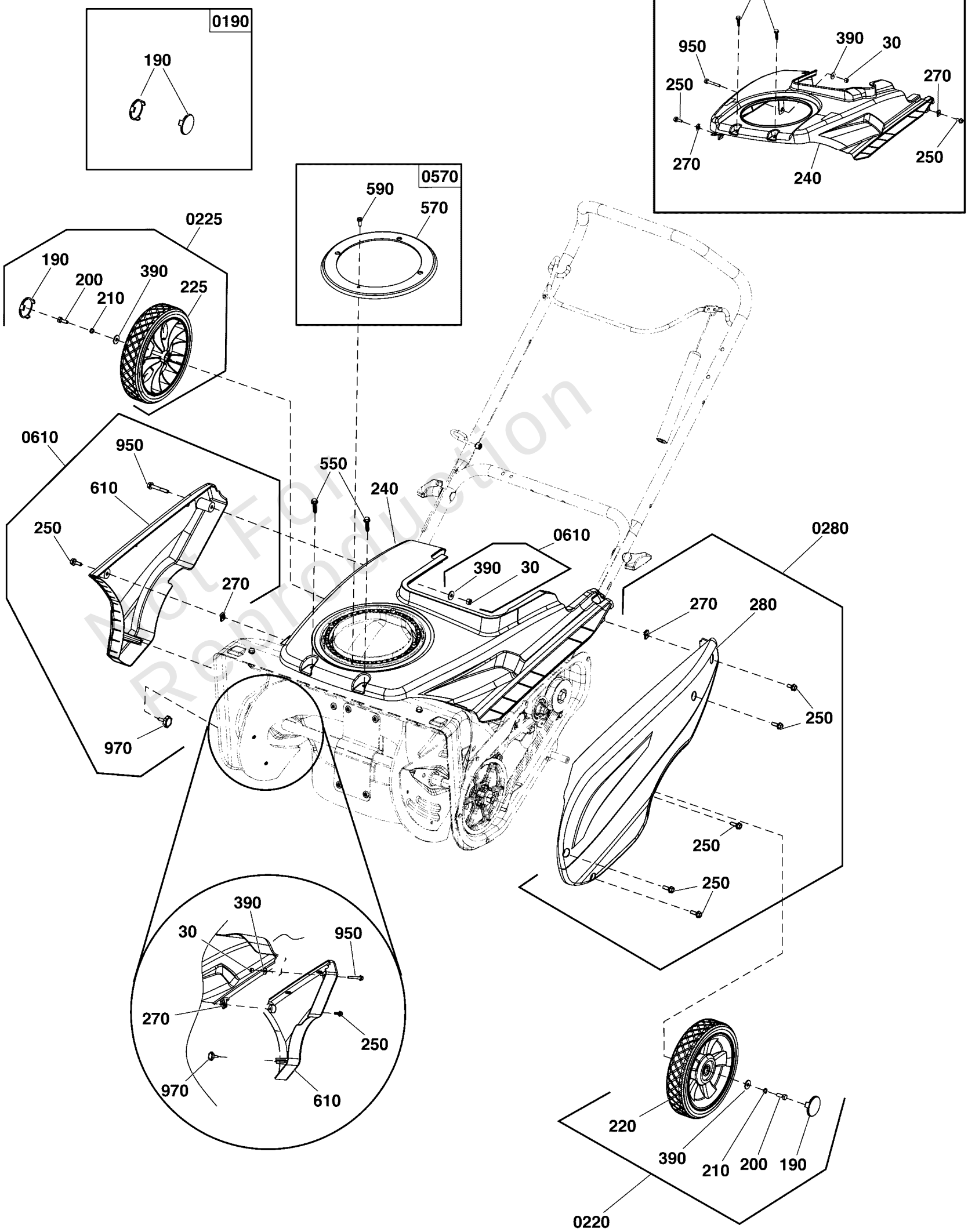

Not For Reproduction

Copyright © Briggs & Stratton. All Rights reserved

Wheel & Body Covering Group

REF NO	PART NO	QTY	DESCRIPTION
0190	709883	1	KIT, Wheel Cover, Pewter -(Incl. Ref. Nos. 190)
190	-----	2	COVER, End, Wheel, Pewter
0220	709885	1	KIT, WHEEL, LEFT, PEWTER -(Incl. Ref. Nos. 190, 200, 210, 220 & 390)
190	-----	1	COVER, End, Wheel, Pewter
200	-----	1	BOLT, M6x16, Hex Head
210	-----	1	WASHER, M6, Split Lock, MC
220	-----	1	WHEEL, Left, 1.75 X 8, Pewter
390	-----	1	WASHER, 6 X 18 X 1.5, Flat
0225	770059	1	KIT, WHEEL, RIGHT, PEWTER -(Incl. Ref. Nos. 190, 200, 210, 225 & 390)
190	-----	1	COVER, End, Wheel, Pewter
200	-----	1	BOLT, M6x16, Hex Head
210	-----	1	WASHER, M6, Split Lock, MC
225	-----	1	WHEEL, Right, 1.75 X 8, Pewter
390	-----	1	WASHER, 6 X 18 X 1.5, Flat
0240	709890	1	KIT, Top Cover -(Incl. Ref. Nos. 30, 240,250,270,390,550 &950))
30	-----	1	NUT, M6, Lock
240	-----	1	COVER, Top, Orange
250	-----	2	SCREW, M6x16, Hex Washer Head
270	-----	2	NUT, M6, CLIP
390	-----	1	WASHER, 6 X 18 X 1.5, Flat
550	7091081SM	2	HWST, 1/4-15X3/4 BZ
950	-----	1	SCREW, M6x40, Hex Flange Head
0280	709895	1	KIT, Drive Case Cover -(Incl. Ref. Nos. 250, 270 & 280)
250	-----	7	SCREW, M6x16, Hex Washer Head
270	-----	1	NUT, M6, CLIP
280	-----		COVER, Drive Case, Black
0570	709887	1	KIT, CHUTE MOISTURE COVER -(Incl. Ref. Nos. 570 & 590)
570	-----	1	COVER, Chute Moisture
590	316042MA	1	SCREW, 10X.62 UNSL-HW
0610	709915	1	KIT, Side Cover, Right -(Incl. Ref. Nos. 30, 250, 270, 390, 610, 950 & 970)
30	-----	1	NUT, M6, Lock
250	-----	2	SCREW, M6x16, Hex Washer Head
270	-----	2	NUT, M6, CLIP
390	-----	1	WASHER, 6 X 18 X 1.5, Flat
610	-----	1	COVER, Side, Orange
950	-----	1	SCREW, M6x40, Hex Flange Head
970	-----	1	SCREW, M5x20, Knob, Self-Tapping

Not For Reproduction

Copyright © Briggs & Stratton. All Rights reserved

Hardware Identification & Torque Specifications

Torque Specification Chart

FOR STANDARD METRIC MACHINE HARDWARE (Tolerance ± 20%)

Property Class	5.6 Class 5.6		8.8 Class 8.8		10.9 Class 10.9		12.9 Class 12.9	
Size Of Hardware	*in/lbs* **ft/lbs**	Nm.	*in/lbs* **ft/lbs**	Nm.	*in/lbs* **ft/lbs**	Nm.	*in/lbs* **ft/lbs**	Nm.
M3	*5.88*	*.56*	*13.44*	*1.28*	*19.2*	*1.80*	*22.92*	2.15
M4	*13.44*	*1.28*	*30.72*	*2.90*	*43.44*	*4.10*	*52.56*	4.95
M5	*26.4*	*2.50*	*60.96*	*5.75*	**5.97**	*8.10*	**7.15**	9.7
M6	*44.64*	*4.3*	**7.3**	*9.9*	**10.3**	*14*	**12.1**	16.5
M7	**5.2**	*7.1*	**12.1**	*16.5*	**16.9**	*23*	**19.9**	27
M8	**7.7**	*10.5*	**17.7**	*24*	**25**	*34*	**29**	40
M10	**15**	*21*	**35**	*48*	**50**	*67*	**59**	81
M12	**26**	*36*	**61**	*83*	**86.2**	*117*	**103**	140
M14	**42**	*58*	**101**	*132*	**136**	*185*	**162**	220
M16	**64**	*88*	**147**	*200*	**210**	*285*	**250**	340
M18	**89**	*121*	**202**	*275*	**287**	*390*	**346**	470
M20	**126**	*171*	**290**	*390*	**405**	*550*	**486**	660
M22	**169**	*230*	**390**	*530*	**559**	*745*	**656**	890
M24	**217**	*295*	**497**	*375*	**708**	*960*	**840**	1140
M27	**320**	*435*	**733**	*995*	**1032**	*1400*	**1239**	1680
M30	**435**	*590*	**995**	*1350*	**1401**	*1900*	**1681**	2280
M33	**590**	*800*	**1349**	*1830*	**1902**	*2580*	**2278**	3090
M36	**759**	*1030*	**1740**	*2360*	**2441**	*3310*	**2935**	3980
M39	**988**	*1340*	**2249**	*3050*	**3163**	*4290*	**3798**	5150

The guides and ruler furnished below are designed to help you select the appropriate hardware.

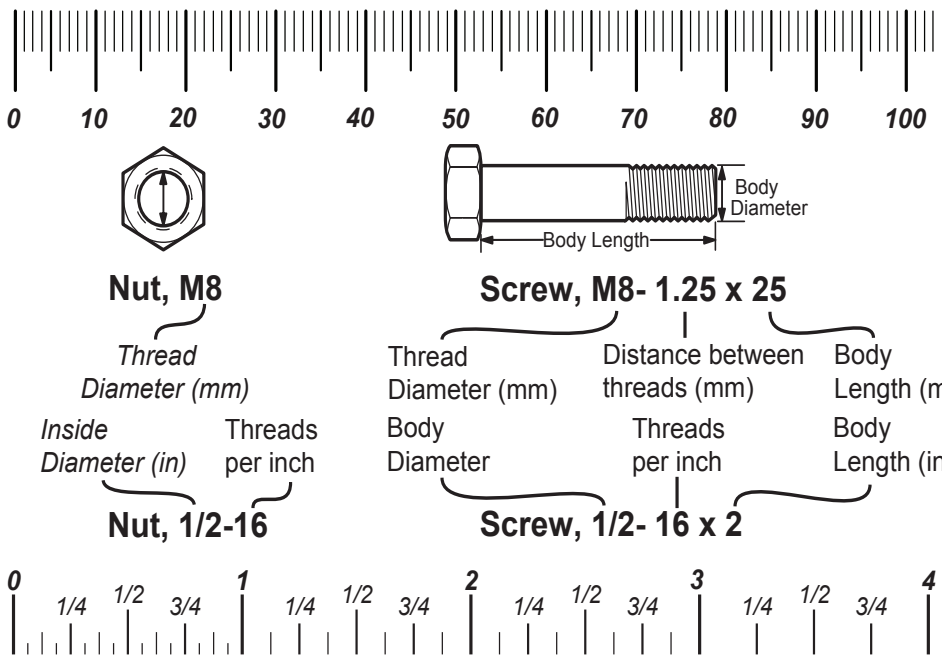

Standard Hardware Sizing

When a washer or nut is identified as **1/2"** (M8), this is the *Nominal size*, meaning the *inside diameter* is 1/2 inch (8mm metric thread diameter); if a second number is present it represents the *threads per inch* (distance between threads).

When bolt or capscrew is identified as **1/2 - 16 x 2"** (M8 - 1.25 x 50), this means the *Nominal size*, or body diameter is 1/2 inch (8mm metric thread diameter), the second number,16, represents the *threads per inch, (distance between threads).* The final number is the body length of the bolt or screw, 2 inches (50mm).

Torque Specification Chart

FOR STANDARD MACHINE HARDWARE (Tolerance ± 20%)

Hardware Grade	No Marks SAE Grade 2		SAE Grade 5		SAE Grade 8	
Size Of Hardware	*in/lbs* **ft/lbs**	Nm.	*in/lbs* **ft/lbs**	Nm.	*in/lbs* **ft/lbs**	Nm.
8-32	*19*	2.1	*30*	3.4	*41*	4.6
8-36	*20*	2.3	*31*	3.5	*43*	4.9
10-24	*27*	3.1	*43*	4.9	*60*	6.8
10-32	*31*	3.5	*49*	5.5	*68*	7.7
1/4-20	*66*	7.6	**8**	10.9	**12**	16.3
1/4-28	*76*	8.6	**10**	13.6	**14**	19.0
5/16-18	**11**	15.0	**17**	23.1	**25**	34.0
5/16-24	**12**	16.3	**19**	25.8	**29**	34.0
3/8-16	**20**	27.2	**30**	40.8	**45**	61.2
3/8-24	**23**	31.3	**35**	47.6	**50**	68.0
7/16-14	**30**	40.8	**50**	68.0	**70**	95.2
7/16-20	**35**	47.6	**55**	74.8	**80**	108.8
1/2-13	**50**	68.0	**75**	102.0	**110**	149.6
1/2-20	**55**	74.8	**90**	122.4	**120**	163.2
9/16-12	**65**	88.4	**110**	149.6	**150**	204.0
9/16-18	**75**	102.0	**120**	163.2	**170**	231.2
5/8-11	**90**	122.4	**150**	204.0	**220**	299.2
5/8-18	**100**	136	**180**	244.8	**240**	326.4
3/4-10	**160**	217.6	**260**	353.6	**386**	525.0
3/4-16	**180**	244.8	**300**	408.0	**420**	571.2
7/8-9	**140**	190.4	**400**	544.0	**600**	816.0
7/8-14	**155**	210.8	**440**	598.4	**660**	897.6
1-8	**220**	299.2	**580**	788.8	**900**	1,244.0
1-12	**240**	326.4	**640**	870.4	**1,000**	1,360.0

NOTES

1. These torque values are to be used for all hardware excluding: locknuts, self-tapping screws, thread forming screws, sheet metal screws and socket head setscrews.
2. Recommended seating torque values for locknuts:
   a. for prevailing torque locknuts - use 65% of grade 5 torques.
   b. for flange whizlock nuts and screws - use 135% of grade 5 torques.
3. Unless otherwise noted on assembly drawings, all torque values must meet this specification.

Common Hardware Types

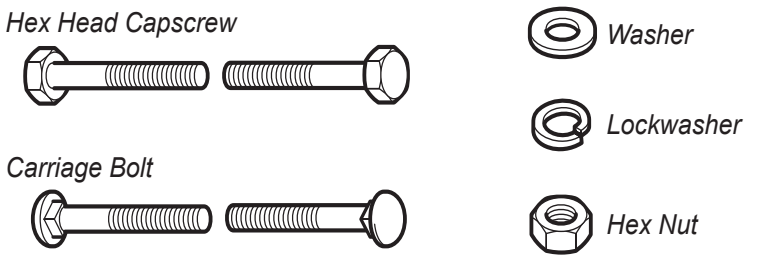

Wrench & Fastener Size Guide

1/4" Bolt or Nut Wrench—7/16"

5/16" Bolt or Nut Wrench—1/2"

3/8" Bolt or Nut Wrench—9/16"

7/16" Bolt or Nut Wrench (Bolt)—5/8" Wrench (Nut)—11/16"

1/2" Bolt or Nut Wrench—3/4"

M6 Bolt or Nut Wrench—10mm

M8 Bolt or Nut Wrench—13mm

M10 Bolt or Nut Wrench—17mm

M12 Bolt or Nut Wrench—19mm

M14 Bolt or Nut Wrench—22 mm

Copyright © Briggs & Stratton. All Rights reserved

19-Apr-2024