Parts Manual

Mfg. No: 1018-0
1,750 PSI

Copyright © Briggs & Stratton. All Rights reserved

Model Components

Page

Pressure Washer. 4
Pump. 6
Torque Specification Chart. 8

Not For Reproduction

Copyright © Briggs & Stratton. All Rights reserved

Note: Unless noted otherwise, use the standard torque specifications

Mfg. No: 1018-0

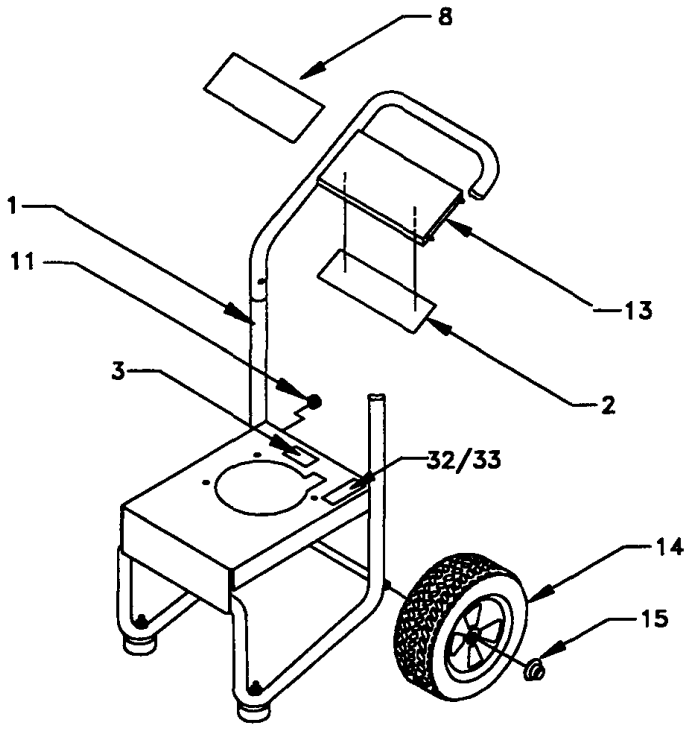

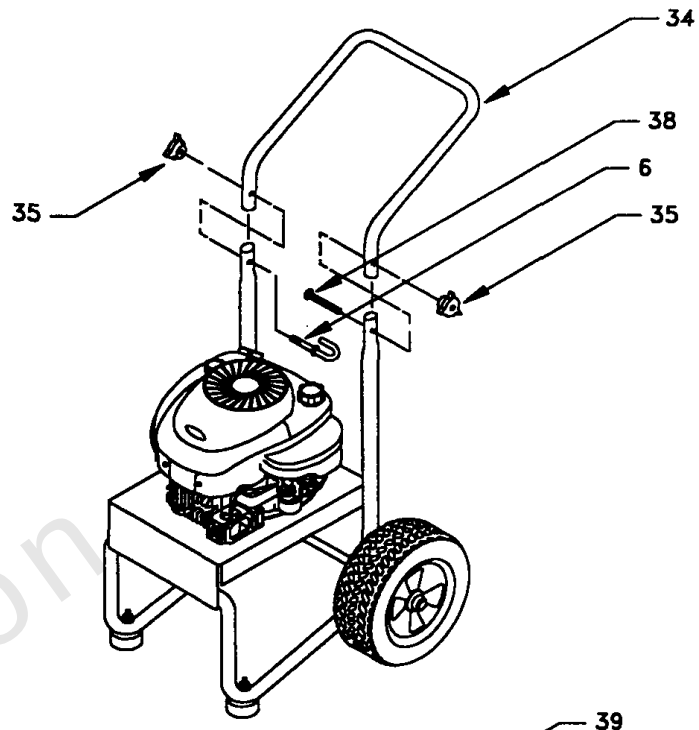

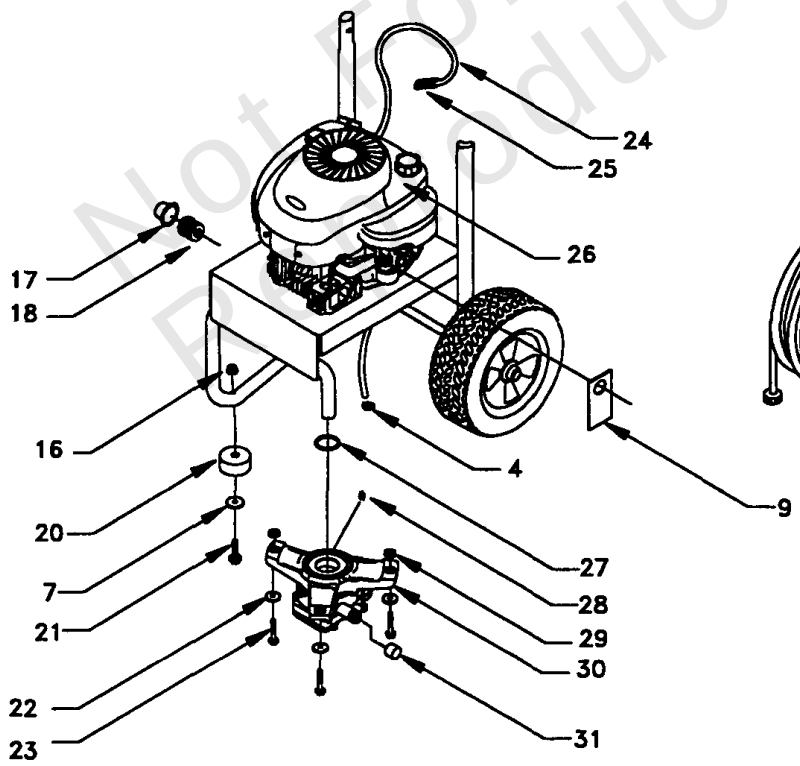

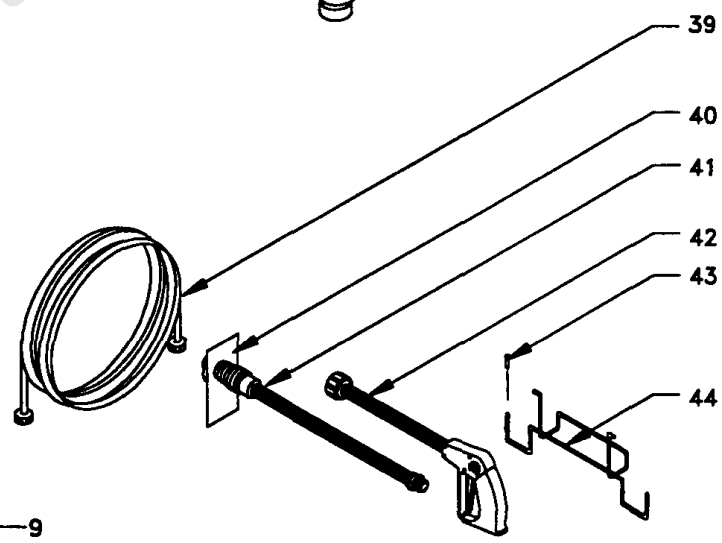

Not For Production

Copyright © Briggs & Stratton. All Rights reserved

Pressure Washer

REF NO	PART NO	QTY	DESCRIPTION
1	B1721	1	BASE, VSPW
2	B1932	1	DECAL, Instructions
3	20566	1	DECAL, 1-800 Number
4	48031G	1	CLAMP, Hose 3/16"
6	B1730	1	BOLT, Eye
7	-----	2	WASHER, Flat, 5/16
8	B1726	1	DECAL, Logo 1750 PSI
9	B1210	1	CARD, Starting Instructions
11	30809	1	GROMMET, Chem Hose
13	B1631B	1	BILLBOARD, Plastic
14	B1760	2	TIRE, 3.5" X 10" Black Mag
15	75402	2	PUSHNUT, 1/2"
16	52858	2	NUT, M8 Locking Flange
17	A1408	1	CAP, Garden Hose Inlet
18	21424	1	CONNECTOR, Garden Hose
20	27007	2	MOUNT, Rubber Foot
21	51731	2	HHCS, M8 X 1.25 X 50 Long
22	96796	3	WASHER, Grommet Support
23	39288	3	HHCS, M8 x 1.25 x 55 Long
24	A1040B	1	HOSE, Chemical
25	A1041	1	FILTER, Chemical Hose
26	B1469	1	ENGINE, TECUMSEH 6 HP ELITE LE
27	98300	1	SEAL, Engine Donut
28	96137	1	PLUG, 1/8" NPT w/Sealant
29	20874	3	SPACER, Engine Mount
30	-----	1	PUMP, GPW-EG Assembly -(For replacement, order 209940GS)
30	209940GS	1	REPLACEMENT PUMP ASSEMBLY
31	97100	1	CAP, High Pressure
32	88056	1	DECAL, Data
33	79552	1	OVERLAMINATE
34	B1945	1	HANDLE, VS PW
35	97178	2	KNOB, PW Handle
38	31669	1	BOLT, 1/4"-20 X 1.75" Carriage
39	97810	1	HOSE, 1/4" X 25'
40	97566	1	HANG TAG, Nozzle
41	98317B	1	WAND, Adjustable Nozzle
42	98541	1	GUN, High Pressure
43	B1460	2	CAP, Vinyl Black
44	B1723	1	WIREFORM

Not For Reproduction

Copyright © Briggs & Stratton. All Rights reserved

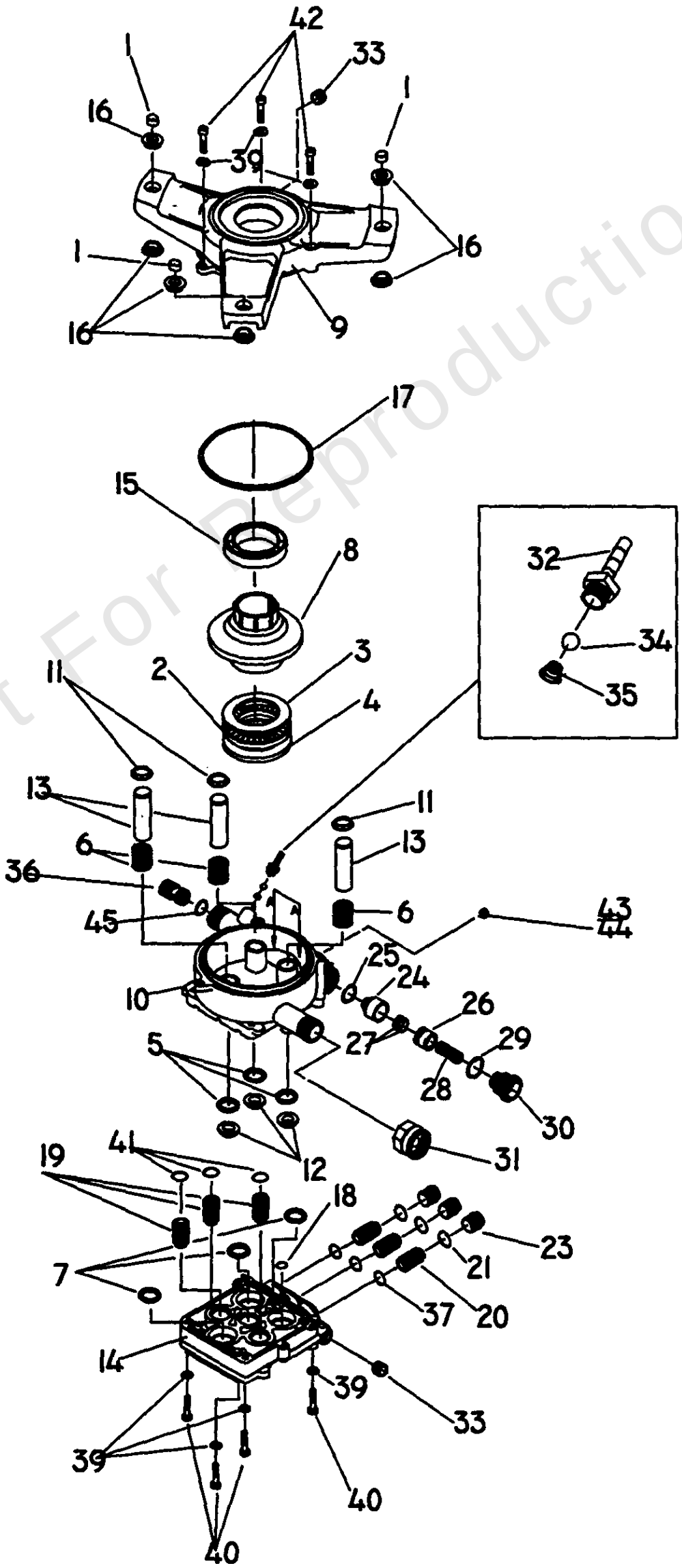

Not For Reproduction

Pump

REF NO	PART NO	QTY	DESCRIPTION
1	96795	3	SLEEVE, RUBBER GROMMET SPACER
2	21640	1	ASSY., CAGE NEEDLE BEARING 45 X 65
3	21641	1	WASHER, BRG. DIA. 45 x 65 x 1T
4	21642	1	WASHER, BRG. DIA. 36 x 65 x 6T -[SPECIAL]
5	93680	3	SEAL, OIL PISTON DIA. 15
6	97828	3	SPRING, PISTON RETURN - EG
7	93667	3	SEAL, U-CLIP
8	98304	3	CAM, AXIAL 5.6mm w/INSERT
9	98227	1	ADAPTER, ENGINE
10	20110	1	HOUSING, PISTON AND UNLOADER
11	97830	3	RETAINER, PISTON SPRING
12	97831	3	SPACER, PILOT
13	97832	3	PISTON, DIA. 15-65 LONG
14	A1111B	1	HEAD, PUMP
15	57018	1	BEARING, BALL RADIAL
16	21429	6	BUSHING, RUBBER
17	97835	1	"O" RING, HOUSING SEAL
18	97837	1	"O" RING, HI-PRESSURE TRANSFER
19	97838	3	ASS'Y, CHECK VALVE - INLET
20	97839	3	ASS'Y, CHECK VALVE - OUTLET
21	97840	3	"O" RING, INLET PORT CAP
23	97841	3	CAP, INLET PORT
24	97842	1	SEAT, UNLOADER
25	97843	1	"O" RING, UNLOADER VENTURI
26	B1253	1	PISTON, UNLOADER
27	97845	2	SEAL, UNLOADER "PARBACK"
28	A2731	1	SPRING, UNLOADER
29	97847	1	"O" RING, UNLOADER CAP
30	A2730	1	CAP, UNLOADER
31	21424	1	GARDEN HOSE CONNECTOR
32	A1575	1	BARB, HOSE WITH NYLON INSERT
33	96137	2	PLUG, 1/8" NPT [WITH SEALANT]
34	95379	1	BALL, DIA. 5.5 CHEMICAL INJECTOR
35	95380	1	SPRING, CHEMICAL INJECTOR
36	20631	1	VENTURI, CHEMICAL INJECTOR
37	97934	3	"O" RING, CHECK VALVE - INLET
39	93873	7	LOCK WASHER, M6 RIBBED
40	40946	4	SOCKET HEAD CAPSCREW M6 - 1.0 x 35mm
41	97851	3	"O" RING PISTON HOUSING
42	97962	3	SOCKET HEAD CAPSCREW, M6 - 1.0 x 25mm
43	50873	1	PLUG, PIPE 1/4" NPT
44	20876	0	.5 OZ. SEALANT, THREAD LOCKTIGHT 545
45	B1077	1	"O" RING VENTURI

Not For Reproduction

Copyright © Briggs & Stratton. All Rights reserved

Hardware Identification & Torque Specifications

Torque Specification Chart

FOR STANDARD METRIC MACHINE HARDWARE (Tolerance ± 20%)

Property Class	5.6 Class 5.6		8.8 Class 8.8		10.9 Class 10.9		12.9 Class 12.9	
Size Of Hardware	*in/lbs* **ft/lbs**	Nm.	*in/lbs* **ft/lbs**	Nm.	*in/lbs* **ft/lbs**	Nm.	*in/lbs* **ft/lbs**	Nm.
M3	*5.88*	*.56*	*13.44*	*1.28*	*19.2*	*1.80*	*22.92*	2.15
M4	*13.44*	*1.28*	*30.72*	*2.90*	*43.44*	*4.10*	*52.56*	4.95
M5	*26.4*	*2.50*	*60.96*	*5.75*	**5.97**	*8.10*	**7.15**	9.7
M6	*44.64*	*4.3*	**7.3**	*9.9*	**10.3**	*14*	**12.1**	16.5
M7	**5.2**	*7.1*	**12.1**	*16.5*	**16.9**	*23*	**19.9**	27
M8	**7.7**	*10.5*	**17.7**	*24*	**25**	*34*	**29**	40
M10	**15**	*21*	**35**	*48*	**50**	*67*	**59**	81
M12	**26**	*36*	**61**	*83*	**86.2**	*117*	**103**	140
M14	**42**	*58*	**101**	*132*	**136**	*185*	**162**	220
M16	**64**	*88*	**147**	*200*	**210**	*285*	**250**	340
M18	**89**	*121*	**202**	*275*	**287**	*390*	**346**	470
M20	**126**	*171*	**290**	*390*	**405**	*550*	**486**	660
M22	**169**	*230*	**390**	*530*	**559**	*745*	**656**	890
M24	**217**	*295*	**497**	*375*	**708**	*960*	**840**	1140
M27	**320**	*435*	**733**	*995*	**1032**	*1400*	**1239**	1680
M30	**435**	*590*	**995**	*1350*	**1401**	*1900*	**1681**	2280
M33	**590**	*800*	**1349**	*1830*	**1902**	*2580*	**2278**	3090
M36	**759**	*1030*	**1740**	*2360*	**2441**	*3310*	**2935**	3980
M39	**988**	*1340*	**2249**	*3050*	**3163**	*4290*	**3798**	5150

The guides and ruler furnished below are designed to help you select the appropriate hardware.

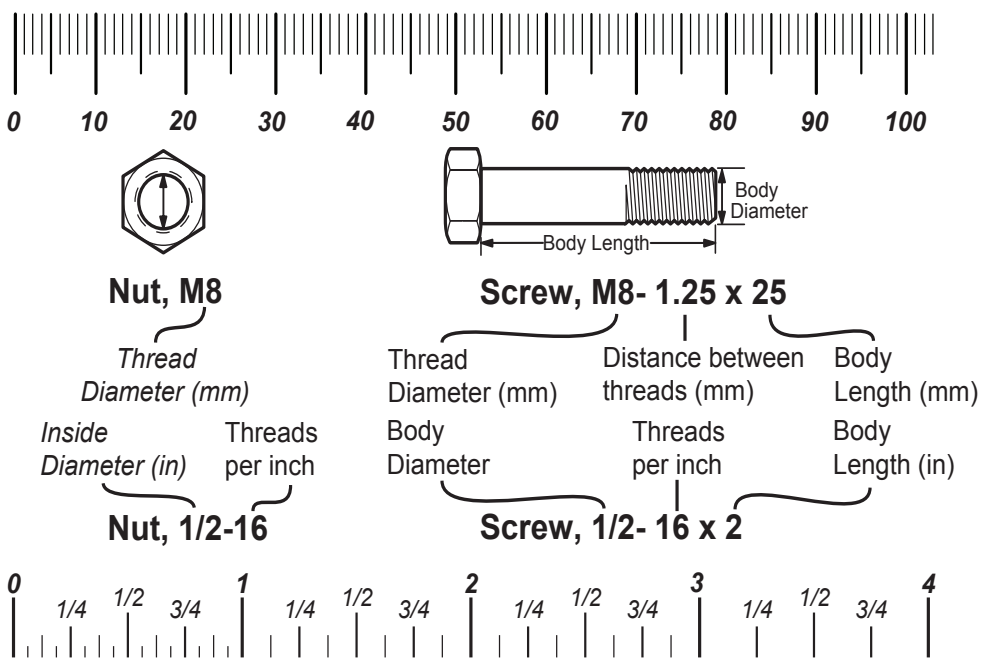

Standard Hardware Sizing

When a washer or nut is identified as **1/2"** (M8), this is the *Nominal size*, meaning the *inside diameter* is 1/2 inch (8mm metric thread diameter); if a second number is present it represents the *threads per inch* (distance between threads).

When bolt or capscrew is identified as **1/2 - 16 x 2"** (M8 - 1.25 x 50), this means the *Nominal size*, or body diameter is 1/2 inch (8mm metric thread diameter), the second number,16, represents the *threads per inch, (distance between threads).* The final number is the body length of the bolt or screw, 2 inches (50mm).

Torque Specification Chart

FOR STANDARD MACHINE HARDWARE (Tolerance ± 20%)

Hardware Grade	No Marks SAE Grade 2		SAE Grade 5		SAE Grade 8	
Size Of Hardware	*in/lbs* **ft/lbs**	Nm.	*in/lbs* **ft/lbs**	Nm.	*in/lbs* **ft/lbs**	Nm.
8-32	*19*	2.1	*30*	3.4	*41*	4.6
8-36	*20*	2.3	*31*	3.5	*43*	4.9
10-24	*27*	3.1	*43*	4.9	*60*	6.8
10-32	*31*	3.5	*49*	5.5	*68*	7.7
1/4-20	*66*	7.6	**8**	10.9	**12**	16.3
1/4-28	*76*	8.6	**10**	13.6	**14**	19.0
5/16-18	**11**	15.0	**17**	23.1	**25**	34.0
5/16-24	**12**	16.3	**19**	25.8	**29**	34.0
3/8-16	**20**	27.2	**30**	40.8	**45**	61.2
3/8-24	**23**	31.3	**35**	47.6	**50**	68.0
7/16-14	**30**	40.8	**50**	68.0	**70**	95.2
7/16-20	**35**	47.6	**55**	74.8	**80**	108.8
1/2-13	**50**	68.0	**75**	102.0	**110**	149.6
1/2-20	**55**	74.8	**90**	122.4	**120**	163.2
9/16-12	**65**	88.4	**110**	149.6	**150**	204.0
9/16-18	**75**	102.0	**120**	163.2	**170**	231.2
5/8-11	**90**	122.4	**150**	204.0	**220**	299.2
5/8-18	**100**	136	**180**	244.8	**240**	326.4
3/4-10	**160**	217.6	**260**	353.6	**386**	525.0
3/4-16	**180**	244.8	**300**	408.0	**420**	571.2
7/8-9	**140**	190.4	**400**	544.0	**600**	816.0
7/8-14	**155**	210.8	**440**	598.4	**660**	897.6
1-8	**220**	299.2	**580**	788.8	**900**	1,244.0
1-12	**240**	326.4	**640**	870.4	**1,000**	1,360.0

NOTES

1. These torque values are to be used for all hardware excluding: locknuts, self-tapping screws, thread forming screws, sheet metal screws and socket head setscrews.
2. Recommended seating torque values for locknuts:
   a. for prevailing torque locknuts - use 65% of grade 5 torques.
   b. for flange whizlock nuts and screws - use 135% of grade 5 torques.
3. Unless otherwise noted on assembly drawings, all torque values must meet this specification.

Common Hardware Types

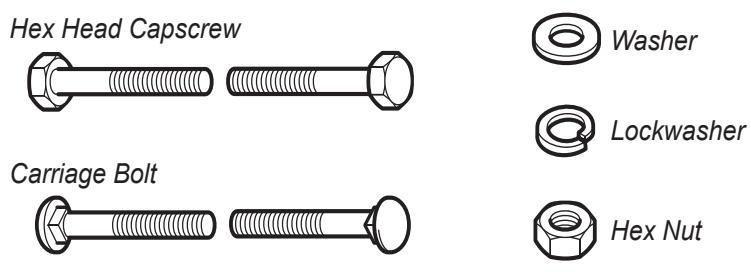

Wrench & Fastener Size Guide

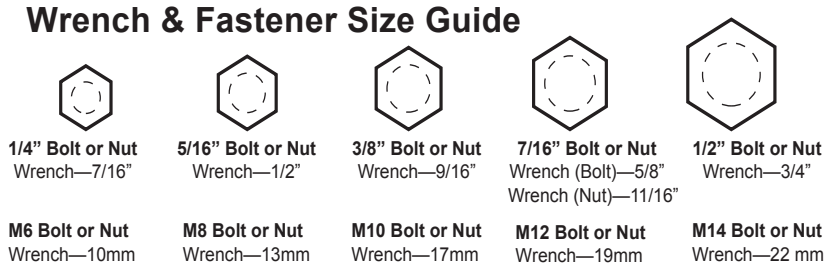

Copyright © Briggs & Stratton. All Rights reserved